An Oshkosh Corporation Company

Operation and Safety Manual

Original Instructions - Keep this manual with the machine at all times.

Boom Lift Models
600SC
660SJC

S/N 0300174703 to Present

ANSI

3121606
March 8, 2016

FOREWORD

This manual is a very important tool! Keep it with the machine at all times.

The purpose of this manual is to provide owners, users, operators, lessors, and lessees with the precautions and operating procedures essential for the safe and proper machine operation for its intended purpose.

Due to continuous product improvements, JLG Industries, Inc. reserves the right to make specification changes without prior notification. Contact JLG Industries, Inc. for updated information.

SAFETY ALERT SYMBOLS AND SAFETY SIGNAL WORDS

This is the Safety Alert Symbol. It is used to alert you to the potential personal injury hazards. Obey all safety messages that follow this symbol to avoid possible injury or death

DANGER

INDICATES AN IMMINENTLY HAZARDOUS SITUATION. IF NOT AVOIDED, WILL RESULT IN SERIOUS INJURY OR DEATH. THIS DECAL WILL HAVE A RED BACKGROUND.

WARNING

INDICATES A POTENTIALLY HAZARDOUS SITUATION. IF NOT AVOIDED, COULD RESULT IN SERIOUS INJURY OR DEATH. THIS DECAL WILL HAVE AN ORANGE BACKGROUND.

CAUTION

INDICATES A POTENTIALLY HAZARDOUS SITUATION. IF NOT AVOIDED, MAY RESULT IN MINOR OR MODERATE INJURY. IT MAY ALSO ALERT AGAINST UNSAFE PRACTICES. THIS DECAL WILL HAVE A YELLOW BACKGROUND.

NOTICE

INDICATES INFORMATION OR A COMPANY POLICY THAT RELATES DIRECTLY OR INDIRECTLY TO THE SAFETY OF PERSONNEL OR PROTECTION OF PROPERTY.

⚠ WARNING

THIS PRODUCT MUST COMPLY WITH ALL SAFETY RELATED BULLETINS. CONTACT JLG INDUSTRIES, INC. OR THE LOCAL AUTHORIZED JLG REPRESENTATIVE FOR INFORMATION REGARDING SAFETY-RELATED BULLETINS WHICH MAY HAVE BEEN ISSUED FOR THIS PRODUCT.

NOTICE

JLG INDUSTRIES, INC. SENDS SAFETY RELATED BULLETINS TO THE OWNER OF RECORD OF THIS MACHINE. CONTACT JLG INDUSTRIES, INC. TO ENSURE THAT THE CURRENT OWNER RECORDS ARE UPDATED AND ACCURATE.

NOTICE

JLG INDUSTRIES, INC. MUST BE NOTIFIED IMMEDIATELY IN ALL INSTANCES WHERE JLG PRODUCTS HAVE BEEN INVOLVED IN AN ACCIDENT INVOLVING BODILY INJURY OR DEATH OF PERSONNEL OR WHEN SUBSTANTIAL DAMAGE HAS OCCURRED TO PERSONAL PROPERTY OR THE JLG PRODUCT.

For:

- Accident Reporting
- Product Safety Publications
- Current Owner Updates
- Questions Regarding Product Safety
- Standards and Regulations Compliance Information
- Questions Regarding Special Product Applications
- Questions Regarding Product Modifications

Contact:

Product Safety and Reliability Department
JLG Industries, Inc.
13224 Fountainhead Plaza
Hagerstown, MD 21742
USA

or Your Local JLG Office
(See addresses on inside of manual cover)

In USA:

Toll Free: 877-JLG-SAFE (877-554-7233)

Outside USA:

Phone: 240-420-2661
Fax: 301-745-3713
E-mail: ProductSafety@JLG.com

REVISION LOG

Original Issue	- November 27, 2013
Revised	- January 5, 2015
Revised	- March 8, 2016

SECTION - PARAGRAPH, SUBJECT **PAGE**

SECTION - 1 - SAFETY PRECAUTIONS

1.1 GENERAL 1-1
1.2 PRE-OPERATION 1-1
Operator Training and Knowledge 1-1
Workplace Inspection 1-2
Machine Inspection 1-3
1.3 OPERATION 1-3
General 1-3
Trip and Fall Hazards 1-4
Electrocution Hazards 1-5
Tipping Hazards 1-7
Crushing and Collision Hazards 1-10
1.4 TOWING, LIFTING, AND HAULING 1-11
1.5 MAINTENANCE 1-11
Maintenance Hazards 1-11
Battery Hazards 1-13

SECTION - 2 - USER RESPONSIBILITIES, MACHINE PREPARATION, AND INSPECTION

2.1 PERSONNEL TRAINING 2-1
Operator Training 2-1
Training Supervision 2-1
Operator Responsibility 2-1
2.2 PREPARATION, INSPECTION, AND MAINTENANCE 2-2
Pre-Start Inspection 2-4
Daily Functional Check 2-5
SkyGuard Function Test 2-8
General 2-13

SECTION - 3 - MACHINE CONTROLS AND INDICATORS

3.1 GENERAL 3-1
3.2 CONTROLS AND INDICATORS 3-1
Ground Control Station 3-2
Ground Control Indictor Panel 3-9
Platform Control Station 3-11
Platform Control Indicator Panel 3-17

SECTION - 4 - MACHINE OPERATION

4.1 DESCRIPTION 4-1
4.2 OPERATING CHARACTERISTICS AND LIMITATIONS 4-1
Capacities 4-1
Stability 4-2
4.3 ENGINE OPERATION 4-4
Starting Procedure 4-4
Shutdown Procedure 4-5
4.4 TRAVELING (DRIVING) 4-5
Traveling Forward or Reverse 4-8
Traveling on a Grade 4-10
4.5 PARKING AND STOWING 4-11
4.6 PLATFORM 4-11
Platform Level Adjustment 4-11
Platform Rotation 4-11

SECTION - PARAGRAPH, SUBJECT **PAGE**

4.7 BOOM 4-12
Swinging the Boom 4-12
Raising and Lowering the Main Boom 4-12
Telescoping the Main Boom 4-13
4.8 SHUT DOWN AND PARK 4-13
4.9 MACHINE SAFETY SYSTEM OVERRIDE (MSSO) (CE ONLY) 4-13
4.10 SKYGUARD OPERATION 4-14
4.11 TIE DOWN AND LIFTING 4-15
Tie Down 4-15
Lifting 4-15
4.12 AUXILIARY POWER 4-15
Activating from the Platform Control Station 4-15
Activating from the Ground Control Station 4-17

SECTION - 5 - EMERGENCY PROCEDURES

5.1 GENERAL 5-1
5.2 INCIDENT NOTIFICATION 5-1
5.3 EMERGENCY OPERATION 5-2
Operator Unable to Control Machine 5-2
Platform or Boom Caught Overhead 5-2
5.4 MACHINE SAFETY SYSTEM OVERRIDE (MSSO) (CE ONLY) 5-2

SECTION - PARAGRAPH, SUBJECT **PAGE**

SECTION - 6 - GENERAL SPECIFICATIONS & OPERATOR MAINTENANCE

6.1 INTRODUCTION 6-1
6.2 OPERATING SPECIFICATIONS 6-1
Capacities 6-2
Engine Data 6-3
Hydraulic Oil 6-3
Major Component Weights 6-7
Serial Number Locations 6-7
6.3 OPERATOR MAINTENANCE 6-12
6.4 SUPPLEMENTAL INFORMATION 6-16

SECTION - 7 - INSPECTION AND REPAIR LOG

FIGURE NUMBER - TITLE	PAGE
2-1. Drive Function Operating Range Diagrams - Sheet 1 of 3	2-9
2-2. Drive Function Operating Range Diagrams - Sheet 2 of 3	2-10
2-3. Drive Function Operating Range Diagrams - Sheet 3 of 3	2-11
2-4. Daily Walk-Around Inspection Diagram	2-12
2-5. Daily Walkaround Inspection Points - Sheet 1 of 2	2-13
2-6. Daily Walkaround Inspection Points - Sheet 2 of 2	2-14
3-1. Ground Control Station - 600SC	3-3
3-2. Ground Control Station - 600SC with Machine Safety System Override (MSSO) (CE Only)	3-4
3-3. Ground Control Station - 660SJC	3-5
3-4. Ground Control Station - 660SJC with Machine Safety System Override (MSSO) (CE Only)	3-6
3-5. Ground Control Indicator Panel	3-10
3-6. Platform Control Console	3-12
3-7. Platform Control Indicator Panel	3-18
4-1. Position of Least Backward Stability	4-2
4-2. Position of Least Forward Stability	4-3
4-3. Grades and Sideslopes	4-6
4-4. Machine Motion Hazard	4-7
4-5. Traveling on a Grade	4-10
4-6. Lifting Chart	4-16
4-7. Decal Installation - Sheet 1 of 6	4-18
4-8. Decal Installation - Sheet 2 of 6	4-19
4-9. Decal Installation - Sheet 3 of 6	4-20
4-10. Decal Installation - Sheet 4 of 6	4-21
4-11. Decal Installation - Sheet 5 of 6	4-22
4-12. Decal Installation - Sheet 6 of 6	4-23
6-1. Serial Number Locations	6-8
6-2. Engine Operating Temperature Specifications - Deutz - Sheet 1 of 2	6-9
6-3. Engine Operating Temperature Specifications - Deutz - Sheet 2 of 2	6-10
6-4. Operator Maintenance and Lubrication Diagram	6-11

FIGURE NUMBER - TITLE **PAGE** **FIGURE NUMBER - TITLE** **PAGE**

This Page Left Blank Intentionally.

TABLE NUMBER - TITLE		PAGE
1-1	Minimum Approach Distances (M.A.D.)	1-6
1-2	Beaufort Scale (For Reference Only)	1-9
2-1	Inspection and Maintenance Table	2-3
4-1	Skyguard Function Table	4-14
4-2	600SC Decal Legend	4-24
4-3	660SJC Decal Legend	4-28
6-1	Operating Specifications	6-1
6-2	Capacities	6-2
6-3	Deutz D2011L04 Specifications	6-3
6-4	Hydraulic Oil	6-3
6-5	Mobilfluid 424 Specs	6-4
6-6	Mobil DTE 10 Excel 32 Specs	6-4
6-7	Quintolubric 888-46	6-5
6-8	Mobil EAL 224H Specs	6-5
6-9	Mobil EAL H 46 Specs	6-6
6-10	Exxon Univis HVI 26 Specs	6-6
6-11	Major Component Weights	6-7
6-12	Lubrication Specifications	6-12
7-1	Inspection and Repair Log	7-1

TABLE NUMBER - TITLE	PAGE

TABLE NUMBER - TITLE **PAGE** **TABLE NUMBER - TITLE** **PAGE**

This Page Left Blank Intentionally.

SECTION 1. SAFETY PRECAUTIONS

1.1 GENERAL

This section outlines the necessary precautions for proper and safe machine usage and maintenance. It is mandatory that a daily routine is established based on the content of this manual to promote proper machine usage. A maintenance program, using the information provided in this manual and the Service and Maintenance Manual, must also be established by a qualified person and must be followed to ensure that the machine is safe to operate.

The owner/user/operator/lessor/lessee of the machine must not accept operating responsibility until this manual has been read, training is accomplished, and operation of the machine has been completed under the supervision of an experienced and qualified operator.

This section contains the responsibilities of the owner, user, operator, lessor, and lessee concerning safety, training, inspection, maintenance, application, and operation. If there are any questions with regard to safety, training, inspection, maintenance, application, and operation, please contact JLG Industries, Inc. ("JLG").

⚠ WARNING

FAILURE TO COMPLY WITH THE SAFETY PRECAUTIONS LISTED IN THIS MANUAL COULD RESULT IN MACHINE DAMAGE, PROPERTY DAMAGE, PERSONAL INJURY OR DEATH.

1.2 PRE-OPERATION

Operator Training and Knowledge

- The Operation and Safety Manual must be read and understood in its entirety before operating the machine. For clarification, questions, or additional information regarding any portions of this manual, contact JLG Industries, Inc.

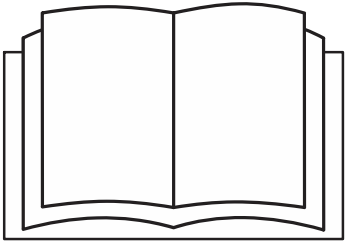

- An operator must not accept operating responsibilities until adequate training has been given by competent and authorized persons.
- Allow only those authorized and qualified personnel to operate the machine who have demonstrated that they understand the safe and proper operation and maintenance of the unit.
- Read, understand, and obey all DANGERS, WARNINGS, CAUTIONS, and operating instructions on the machine and in this manual.
- Ensure that the machine is to be used in a manner which is within the scope of its intended application as determined by JLG.
- All operating personnel must be familiar with the emergency controls and emergency operation of the machine as specified in this manual.
- Read, understand, and obey all applicable employer, local, and governmental regulations as they pertain to your utilization and application of the machine.

Workplace Inspection

- Precautions to avoid all hazards in the work area must be taken by the user before and during operation of the machine.
- Do not operate or raise the platform from a position on trucks, trailers, railway cars, floating vessels, scaffolds or other equipment unless the application is approved in writing by JLG.
- Before operation, check work area for overhead hazards such as electric lines, bridge cranes, and other potential overhead obstructions.
- Check operating surfaces for holes, bumps, drop-offs, obstructions, debris, concealed holes, and other potential hazards.
- Check the work area for hazardous locations. Do not operate the machine in hazardous environments unless approved for that purpose by JLG.
- Ensure that the ground conditions are adequate to support the maximum tire load indicated on the tire load decals located on the chassis adjacent to each wheel. Do not travel on unsupported surfaces.

Machine Inspection

- Do not operate this machine until the inspections and functional checks as specified in Section 2 of this manual have been performed.
- Do not operate this machine until it has been serviced and maintained according to the maintenance and inspection requirements as specified in the machine's Service and Maintenance Manual.
- Ensure all safety devices are operating properly. Modification of these devices is a safety violation.

⚠ WARNING

MODIFICATION OR ALTERATION OF AN AERIAL WORK PLATFORM SHALL BE MADE ONLY WITH PRIOR WRITTEN PERMISSION FROM THE MANUFACTURER.

- Do not operate any machine on which the safety or instruction placards or decals are missing or illegible.
- Check the machine for modifications to original components. Ensure that any modifications have been approved by JLG.
- Avoid accumulation of debris on platform floor. Keep mud, oil, grease, and other slippery substances from footwear and platform floor.

1.3 OPERATION

General

- Machine operation requires your full attention. Bring the machine to a full stop before using any device, i.e. cell phones, two-way radios, etc. that will distract your attention from safely operating the machine.
- Do not use the machine for any purpose other than positioning personnel, their tools, and equipment.
- Before operation, the user must be familiar with the machine capabilities and operating characteristics of all functions.
- Never operate a malfunctioning machine. If a malfunction occurs, shut down the machine. Remove the unit from service and notify the proper authorities.
- Do not remove, modify, or disable any safety devices.
- Never slam a control switch or lever through neutral to an opposite direction. Always return switch to neutral and stop before moving the switch to the next function. Operate controls with slow and even pressure.
- Do not allow personnel to tamper with or operate the machine from the ground with personnel in the platform, except in an emergency.

- Do not carry materials directly on platform railing unless approved by JLG.
- When two or more persons are in the platform, the operator shall be responsible for all machine operations.
- Always ensure that power tools are properly stowed and never left hanging by their cord from the platform work area.
- When driving, always position boom over rear axle in line with the direction of travel. Remember, if boom is over the front axle, steer and drive functions will be reversed.
- Do not assist a stuck or disabled machine by pushing or pulling except by pulling at the chassis tie-down lugs.
- Fully lower platform and shut off all power before leaving machine.
- Remove all rings, watches, and jewelry when operating machine. Do not wear loose fitting clothing or long hair unrestrained which may become caught or entangled in equipment.
- Persons under the influence of drugs or alcohol or who are subject to seizures, dizziness or loss of physical control must not operate this machine.
- Hydraulic cylinders are subject to thermal expansion and contraction. This may result in changes to the boom and/or platform position while the machine is stationary. Factors affecting thermal movement can include the length of time the machine will remain stationary, hydraulic oil temperature, ambient air temperature, and boom and platform position.

Trip and Fall Hazards

- During operation, occupants in the platform must wear a full body harness with a lanyard attached to an authorized lanyard anchorage point. Attach only one (1) lanyard per lanyard anchorage point.

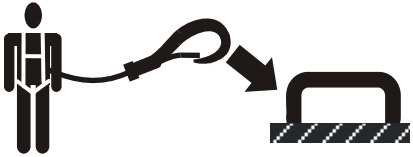

- Enter and exit only through gate area. Use extreme caution when entering or leaving platform. Ensure that the platform assembly is fully lowered. Face the machine when entering or leaving the platform. Always maintain “three point contact” with the machine, using two hands and one foot or two feet and one hand at all times during entry and exit.

- Before operating the machine, make sure all gates are closed and fastened in their proper position.

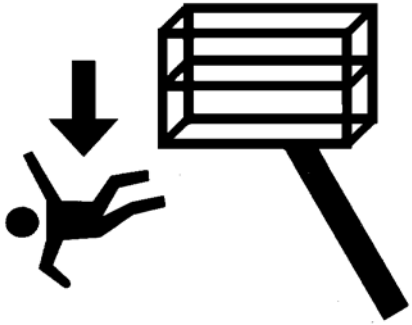

- Keep both feet firmly positioned on the platform floor at all times. Never position ladders, boxes, steps, planks, or similar items on unit to provide additional reach for any purpose.
- Keep oil, mud, and slippery substances cleaned from footwear and the platform floor.

Electrocution Hazards

- This machine is not insulated and does not provide protection from contact or proximity to electrical current.

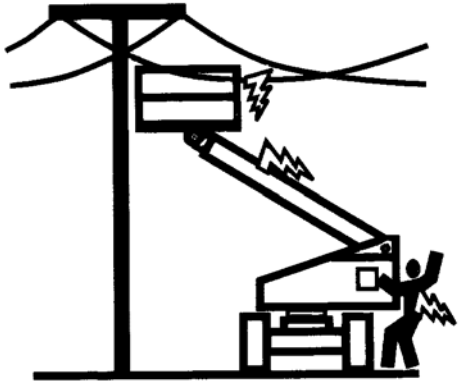

- Maintain distance from electrical lines, apparatus, or any energized (exposed or insulated) parts according to the Minimum Approach Distance (MAD) as shown in Table 1-1.
- Allow for machine movement and electrical line swaying.

Table 1-1. Minimum Approach Distances (M.A.D.)

Voltage Range (Phase to Phase)	MINIMUM APPROACH DISTANCE in Feet (Meters)
0 to 50 KV	10 (3)
Over 50KV to 200 KV	15 (5)
Over 200 KV to 350 KV	20 (6)
Over 350 KV to 500 KV	25 (8)
Over 500 KV to 750 KV	35 (11)
Over 750 KV to 1000 KV	45 (14)

NOTE: ***This requirement shall apply except where employer, local or governmental regulations are more stringent.***

- Maintain a clearance of at least 10 ft. (3m) between any part of the machine and its occupants, their tools, and their equipment from any electrical line or apparatus carrying up to 50,000 volts. One foot additional clearance is required for every additional 30,000 volts or less.

- The minimum approach distance may be reduced if insulating barriers are installed to prevent contact, and the barriers are rated for the voltage of the line being guarded. These barriers shall not be part of (or attached to) the machine. The minimum approach distance shall be reduced to a distance within the designed working dimensions of the insulating barrier. This determination shall be made by a qualified person in accordance with the employer, local, or governmental requirements for work practices near energized equipment.

⚠ DANGER

DO NOT MANEUVER MACHINE OR PERSONNEL INSIDE PROHIBITED ZONE (MAD). ASSUME ALL ELECTRICAL PARTS AND WIRING ARE ENERGIZED UNLESS KNOWN OTHERWISE.

Tipping Hazards

- The user must be familiar with the surface before driving. Do not exceed the allowable sideslope and grade while driving.

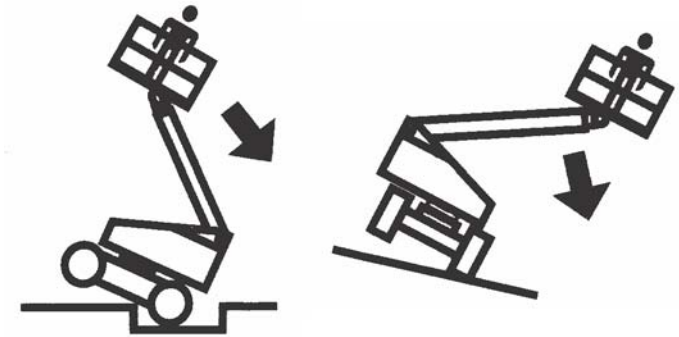

- Do not elevate platform or drive with platform elevated while on or near a sloping, uneven, or soft surface. Ensure machine is positioned on a firm, level and smooth surface before elevating platform or driving with the platform in the elevated position.
- Before driving on floors, bridges, trucks, and other surfaces, check allowable capacity of the surfaces.

- Never exceed the maximum work load as specified on the platform. Keep all loads within the confines of the platform, unless authorized by JLG.
- Keep the chassis of the machine a minimum of 2 ft. (0.6m) from holes, bumps, drop-offs, obstructions, debris, concealed holes, and other potential hazards at the ground level.
- Do not push or pull any object with the boom.
- Never attempt to use the machine as a crane. Do not tie-off machine to any adjacent structure. Never attach wire, cable, or any similar items to platform.
- If boom assembly or platform is in a position that one or more wheels are off the ground, all persons must be removed before attempting to stabilize the machine. Use cranes, forklift trucks, or other appropriate equipment to stabilize machine.
- Do not operate the machine when wind conditions, including gusts, may exceed 28 mph (12.5 m/s). Factors affecting wind speed are; platform elevation, surrounding structures, local weather events, and approaching storms. Refer to Table 1-2, Beaufort scale (For Reference Only) or use other means to monitor wind conditions.
- Wind speed can be significantly greater at height than at ground level.
- Wind speed can change rapidly. Always consider approaching weather events, the time required to lower the platform, and methods to monitor current and potential wind conditions.
- Do not increase surface area of the platform or the load. Increased areas exposed to wind will decrease stability.
- Do not increase the platform size with unauthorized modifications or attachments.

NOTICE

DO NOT OPERATE THE MACHINE WHEN WIND CONDITIONS EXCEED 28 MPH (12.5 M/S).

Table 1-2. Beaufort Scale (For Reference Only)

Beaufort Number	Wind Speed		Description	Land Conditions
	mph	m/s		
0	0	0-0.2	Calm	Calm. Smoke rises vertically
1	1-3	0.3-1.5	Light air	Wind motion visible in smoke
2	4-7	1.6-3.3	Light breeze	Wind felt on exposed skin. Leaves rustle
3	8-12	3.4-5.4	Gentle breeze	Leaves and smaller twigs in constant motion
4	13-18	5.5-7.9	Moderate breeze	Dust and loose paper raised. Small branches begin to move.
5	19-24	8.0-10.7	Fresh breeze	Smaller trees sway.
6	25-31	10.8-13.8	Strong breeze	Large branches in motion. Flags waving near horizontal. Umbrella use becomes difficult.
7	32-38	13.9-17.1	Near Gale/Moderate Gale	Whole trees in motion. Effort needed to walk against the wind.
8	39-46	17.2-20.7	Fresh Gale	Twigs broken from trees. Cars veer on road.
9	47-54	20.8-24.4	Strong Gale	Light structure damage.

Crushing and Collision Hazards

- Approved head gear must be worn by all operating and ground personnel.
- Check work area for clearances overhead, on sides, and bottom of platform when lifting or lowering platform, and driving.

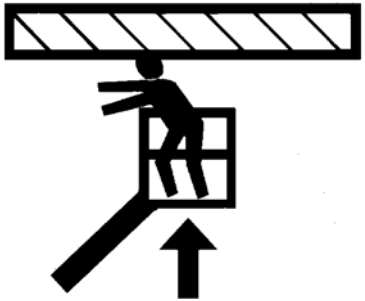

- During operation, keep all body parts inside platform railing.
- Use the boom functions, not the drive function, to position the platform close to obstacles.
- Always post a lookout when driving in areas where vision is obstructed.
- Keep non-operating personnel at least 6 ft. (1.8m) away from machine during all driving and swing operations.
- Under all travel conditions, the operator must limit travel speed according to conditions of ground surface, congestion, visibility, slope, location of personnel, and other factors which may cause collision or injury to personnel.
- Be aware of stopping distances in all drive speeds. When driving in high speed, switch to low speed before stopping. Travel grades in low speed only.
- Do not use high speed drive in restricted or close quarters or when driving in reverse.
- Exercise extreme caution at all times to prevent obstacles from striking or interfering with operating controls and persons in the platform.
- Be sure that operators of other overhead and floor level machines are aware of the aerial work platform's presence. Disconnect power to overhead cranes.
- Warn personnel not to work, stand, or walk under a raised boom or platform. Position barricades on floor if necessary.

1.4 TOWING, LIFTING, AND HAULING

- Never allow personnel in platform while towing, lifting, or hauling.
- This machine should not be towed, except in the event of emergency, malfunction, power failure, or loading/unloading. Refer to the Emergency Procedures section of this manual for emergency towing procedures.
- Ensure boom is in the stowed position and the turntable locked prior to towing, lifting or hauling. The platform must be completely empty of tools.
- When lifting machine, lift only at designated areas of the machine. Lift the unit with equipment of adequate capacity.
- Refer to the Machine Operation section of this manual for lifting information.

1.5 MAINTENANCE

This sub-section contains general safety precautions which must be observed during maintenance of this machine. Additional precautions to be observed during machine maintenance are inserted at the appropriate points in this manual and in the Service and Maintenance Manual. It is of utmost importance that maintenance personnel pay strict attention to these precautions to avoid possible injury to personnel or damage to the machine or property. A maintenance program must be established by a qualified person and must be followed to ensure that the machine is safe.

Maintenance Hazards

- Shut off power to all controls and ensure that all moving parts are secured from inadvertent motion prior to performing any adjustments or repairs.
- Never work under an elevated platform until it has been fully lowered to the full down position, if possible, or otherwise supported and restrained from movement with appropriate safety props, blocking, or overhead supports.
- DO NOT attempt to repair or tighten any hydraulic hoses or fittings while the machine is powered on or when the hydraulic system is under pressure.
- Always relieve hydraulic pressure from all hydraulic circuits before loosening or removing hydraulic components.

- DO NOT use your hand to check for leaks. Use a piece of cardboard or paper to search for leaks. Wear gloves to help protect hands from spraying fluid.

- Ensure replacement parts or components are identical or equivalent to original parts or components.
- Never attempt to move heavy parts without the aid of a mechanical device. Do not allow heavy objects to rest in an unstable position. Ensure adequate support is provided when raising components of the machine.
- Do not use machine as a ground for welding.
- When performing welding or metal cutting operations, precautions must be taken to protect the chassis from direct exposure to weld and metal cutting spatter.
- Do not refuel the machine with the engine running.
- Use only approved non-flammable cleaning solvents.
- Do not replace items critical to stability, such as batteries or solid tires, with items of different weight or specification. Do not modify unit in any way to affect stability.
- Refer to the Service and Maintenance Manual for the weights of critical stability items.

WARNING

MODIFICATION OR ALTERATION OF AN AERIAL WORK PLATFORM SHALL BE MADE ONLY WITH PRIOR WRITTEN PERMISSION FROM THE MANUFACTURER.

Battery Hazards

- Always disconnect batteries when servicing electrical components or when performing welding on the machine.
- Do not allow smoking, open flame, or sparks near battery during charging or servicing.
- Do not contact tools or other metal objects across the battery terminals.
- Always wear hand, eye, and face protection when servicing batteries. Ensure that battery acid does not come in contact with skin or clothing.

⚠ CAUTION

BATTERY FLUID IS HIGHLY CORROSIVE. AVOID CONTACT WITH SKIN AND CLOTHING AT ALL TIMES. IMMEDIATELY RINSE ANY CONTACTED AREA WITH CLEAN WATER AND SEEK MEDICAL ATTENTION.

- Charge batteries only in a well ventilated area.
- Avoid overfilling the battery fluid level. Add distilled water to batteries only after the batteries are fully charged.

NOTES:

SECTION 2. USER RESPONSIBILITIES, MACHINE PREPARATION, AND INSPECTION

2.1 PERSONNEL TRAINING

The aerial platform is a personnel handling device; so it is necessary that it be operated and maintained only by trained personnel.

Persons under the influence of drugs or alcohol or who are subject to seizures, dizziness or loss of physical control must not operate this machine.

Operator Training

Operator training must cover:

1. Use and limitations of the controls in the platform and at the ground, emergency controls and safety systems.
2. Control labels, instructions, and warnings on the machine.
3. Rules of the employer and government regulations.
4. Use of approved fall protection device.
5. Enough knowledge of the mechanical operation of the machine to recognize a malfunction or potential malfunction.
6. The safest means to operate the machine where overhead obstructions, other moving equipment, and obstacles, depressions, holes, or drop-offs exist.
7. Means to avoid the hazards of unprotected electrical conductors.
8. Specific job requirements or machine application.

Training Supervision

Training must be done under the supervision of a qualified person in an open area free of obstructions until the trainee has developed the ability to safely control and operate the machine.

Operator Responsibility

The operator must be instructed that he/she has the responsibility and authority to shut down the machine in case of a malfunction or other unsafe condition of either the machine or the job site.

2.2 PREPARATION, INSPECTION, AND MAINTENANCE

The following table covers the periodic machine inspections and maintenance required by JLG Industries, Inc. Consult local regulations for further requirements for aerial work platforms. The frequency of inspections and maintenance must be increased as necessary when the machine is used in a harsh or hostile environment, if the machine is used with increased frequency, or if the machine is used in a severe manner.

NOTICE

JLG INDUSTRIES, INC. RECOGNIZES A FACTORY TRAINED SERVICE TECHNICIAN AS A PERSON WHO HAS SUCCESSFULLY COMPLETED THE JLG SERVICE TRAINING SCHOOL FOR THE SPECIFIC JLG PRODUCT MODEL.

Table 2-1.Inspection and Maintenance Table

Type	Frequency	Primary Responsibility	Service Qualification	Reference
Pre-Start Inspection	Before using each day; or whenever there's an Operator change.	User or Operator	User or Operator	Operator and Safety Manual
Pre-Delivery Inspection (See Note)	Before each sale, lease, or rental delivery.	Owner, Dealer, or User	Qualified JLG Mechanic	Service and Maintenance Manual and applicable JLG inspection form
Frequent Inspection (See Note)	In service for 3 months or 150 hours, whichever comes first; or Out of service for a period of more than 3 months; or Purchased used.	Owner, Dealer, or User	Qualified JLG Mechanic	Service and Maintenance Manual and applicable JLG inspection form
Annual Machine Inspection (See Note)	Annually, no later than 13 months from the date of prior inspection.	Owner, Dealer, or User	Factory Trained Service Technician (Recommended)	Service and Maintenance Manual and applicable JLG inspection form
Preventative Maintenance	At intervals as specified in the Service and Maintenance Manual.	Owner, Dealer, or User	Qualified JLG Mechanic	Service and Maintenance Manual
NOTE: *Inspection forms are available from JLG. Use the Service and Maintenance Manual to perform inspections.*				

Pre-Start Inspection

The Pre-Start Inspection shall include each of the following:

1. **Cleanliness –** Check all surfaces for leakage (oil, fuel, or battery fluid) or foreign objects. Report any leakage to the proper maintenance personnel.
2. **Structure** - Inspect the machine structure for dents, damage, weld or parent metal cracks or other discrepancies.

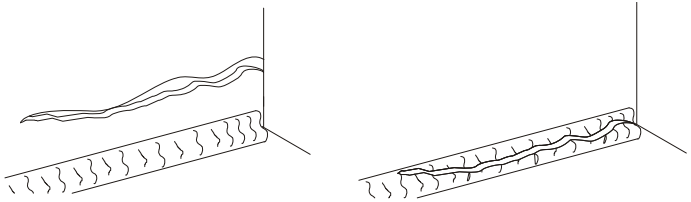

3. **Decals and Placards** – Check all for cleanliness and legibility. Make sure none of the decals and placards are missing. Make sure all illegible decals and placards are cleaned or replaced.
4. **Operation and Safety Manuals** – Make sure a copy of the Operator and Safety Manual, AEM Safety Manual (Domestic only), and ANSI Manual of Responsibilities (Domestic only) is enclosed in the weather resistant storage container.
5. **"Walk-Around" Inspection** – Refer to Figure 2-4., Figure 2-5. and Figure 2-6.
6. **Battery –** Charge as required.
7. **Fuel** (Combustion Engine Powered Machines) – Add the proper fuel as necessary.
8. **Engine Oil Supply** - Ensure the engine oil level is at the Full mark on the dipstick and the filler cap is secure.
9. **Hydraulic Oil** – Check the hydraulic oil level. Ensure hydraulic oil is added as required.
10. **Accessories/Attachments** - Reference the Operator and Safety Manual of each attachment or accessory installed upon the machine for specific inspection, operation, and maintenance instructions.
11. **Function Check** – Once the "Walk-Around" Inspection is complete, perform a functional check of all systems in an area free of overhead and ground level obstructions. Refer to Section 4 for more specific operating instructions.

⚠ WARNING

IF THE MACHINE DOES NOT OPERATE PROPERLY, TURN OFF THE MACHINE IMMEDIATELY! REPORT THE PROBLEM TO THE PROPER MAINTENANCE PERSONNEL. DO NOT OPERATE THE MACHINE UNTIL IT IS DECLARED SAFE FOR OPERATION.

Daily Functional Check

A functional check of all systems should be performed, once the walk-around inspection is complete, in an area free of overhead and ground level obstructions. First, using the ground controls, check all functions controlled by the ground controls. Next, using the platform controls, check all functions controlled by the platform controls.

⚠ WARNING

TO AVOID SERIOUS INJURY, DO NOT OPERATE MACHINE IF ANY CONTROL LEVERS OR TOGGLE SWITCHES CONTROLLING PLATFORM MOVEMENTS DO NOT RETURN TO THE OFF OR NEUTRAL POSITION WHEN RELEASED.

TO AVOID COLLISION AND INJURY IF PLATFORM DOES NOT STOP WHEN A CONTROL SWITCH OR LEVER IS RELEASED, REMOVE FOOT FROM FOOTSWITCH OR USE EMERGENCY STOP TO STOP THE MACHINE.

NOTE: *Perform checks from ground controls first, then from platform controls.*

1. Operate machine from ground control.

NOTE: *For adjustments see Service Manual, Limit Switch Adjustments.*

2. Check elevation limit switch as follows:

   While driving in high drive, elevate the boom to approximately 10 degrees. Drive should cut back to low speed. The switch should reset when the boom is fully lowered.

3. Check capacity limit switch as follows:

   a. Boom Length Switch.

   Raise boom to horizontal. Telescope boom out until 500 lb. light comes on. Make sure the switch resets and the 1000 lb. light comes back on when telescoping in.

   b. Boom Angle Switch.

   Telescope boom to full extension.

   Lift boom up until 1000 lb. light comes on.

   Lift boom down using auxiliary power until 500 lb. light comes on. Boom angle must be approximately 45 to 50 degrees

   Lift boom up until 1000 lb. light comes on. The switch should reset when the boom angle is about 55 degrees to 64 degrees.

NOTE: *If limit switch settings need to be changed, you will need to recheck that the 500 lb. light comes on at 45 degrees to 50 degrees when lifting down.*

4. Drive Disable Switch (Refer to Figure 2-2., Drive Function Operating Range Diagrams - Sheet 2 of 3).
   - **a.** Telescope the boom out over 40 ft. (12.2 m).
   - **b.** Manually tilt the tilt sensor.
   - **c.** Drive Disable Indicator Light should come on.
   - **d.** Retract the boom and elevate to at least 55°.
   - **e.** Manually tilt the tilt sensor.
   - **f.** The Drive Disable Indicator Light should come on again.
5. Raise main boom, extend and retract telescope. Check for delayed movement of fly section, indicating loose cables.

NOTE: *Turntable lock is on turntable facing platform. To disengage lock, pull snap pin from lock pin, lift lock pin up to unlock turntable. Return snap pin to lock pin to hold lock pin in the disengaged position. Reverse procedure to engage turntable lock.*

6. Swing turntable to Left and Right a minimum of 45 degrees. Check for smooth motion.
7. Check the chassis out of level indicator located on the platform control console by driving, with the machine in level position, up a suitable ramp of at least 5° slope. Check the out of level indicator, with the machine on the ramp. If the light does not illuminate, return the machine to a level surface, shut down the machine, and contact a qualified technician before resuming operation.

ANSI, ANSI Export, CSA, Japan	5°
CE, Australia	3°

8. Check that platform automatic self-leveling system functions properly during raising and lowering of the boom.
9. Check platform level adjustment system for proper operation.
10. Check platform rotator for smooth operation and assure platform will rotate 90 degrees in both directions from centerline of boom.
11. Drive forward and reverse; check for proper operation.
12. Steer left and right; check for proper operation.
13. Raise and lower Articulating Jib Boom. Check for smooth operation.

14. Footswitch.

NOTICE

FOOTSWITCH MUST BE ADJUSTED SO THAT FUNCTIONS WILL OPERATE WHEN PEDAL IS APPROXIMATELY AT ITS CENTER OF TRAVEL. IF SWITCH OPERATES WITHIN LAST 1/4" OF TRAVEL, TOP OR BOTTOM, IT SHOULD BE ADJUSTED.

a. Activate hydraulic system. By depressing footswitch. Operate Main Telescope and hold control. Remove foot from footswitch, motion should stop. If it does not, shut down machine and contact a certified JLG service technician.

b. With footswitch depressed, operate Lift and hold control. Remove foot from footswitch, motion should stop. If it does not, shut down machine and contact a certified JLG service technician.

c. With engine power shut down, depress the footswitch. Attempt to start engine. Engine should not attempt to start when footswitch is depressed. If starter engages or engine turns over, shut down machine and contact a certified JLG service technician.

15. Auxiliary Power.

Operate each function control switch (e.g. Tele, Lift and Swing) to assure that they function in both directions using auxiliary power instead of engine power.

16. Ground Controls.

Place Ground/Platform Select switch to Ground. Start engine. Platform controls should not operate.

SkyGuard Function Test

From the Platform Console:

Test the SkyGuard feature by operating the telescope out functions and then activating the SkyGuard sensor. The telescope out function will stop and the telescope in function will operate for a short duration and the horn will sound until the SkyGuard sensor and footswitch are disengaged.

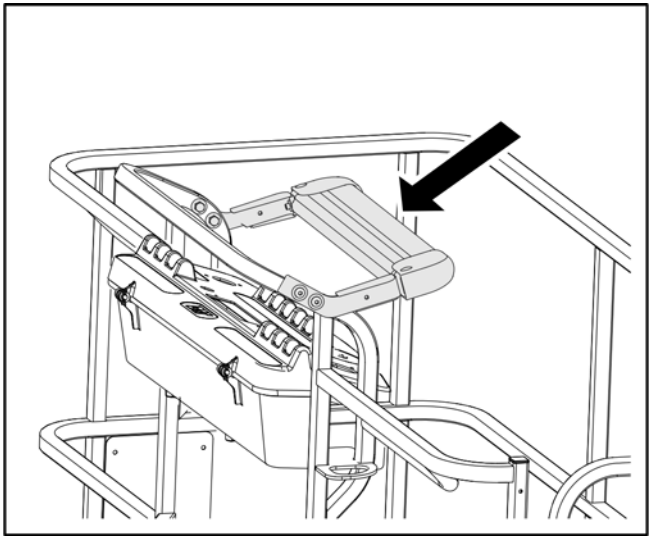

NOTE: *If the machine is equipped with both SkyGuard and Soft Touch, functions will not reverse, only stop.*

NOTE: *If equipped, ensure the blue beacon illuminates when SkyGuard is activated.*

Disengage the SkyGuard sensor, release controls, recycle the foot switch, make sure normal operation is available.

If SkyGuard remains activated after function reversal or cutout, depress and hold the SkyGuard Override Switch to allow normal use of machine functions until the SkyGuard sensor is disengaged.

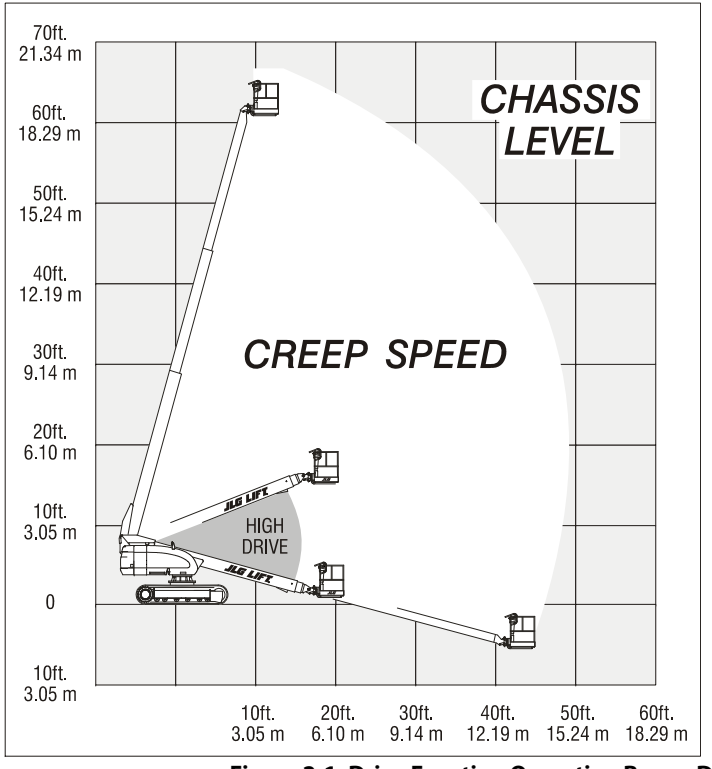

Figure 2-1. Drive Function Operating Range Diagrams - Sheet 1 of 3

NOTE: *In the Transport Mode, High Drive will be disabled above 10° elevation or past 3 feet (1 m) of boom extension.*

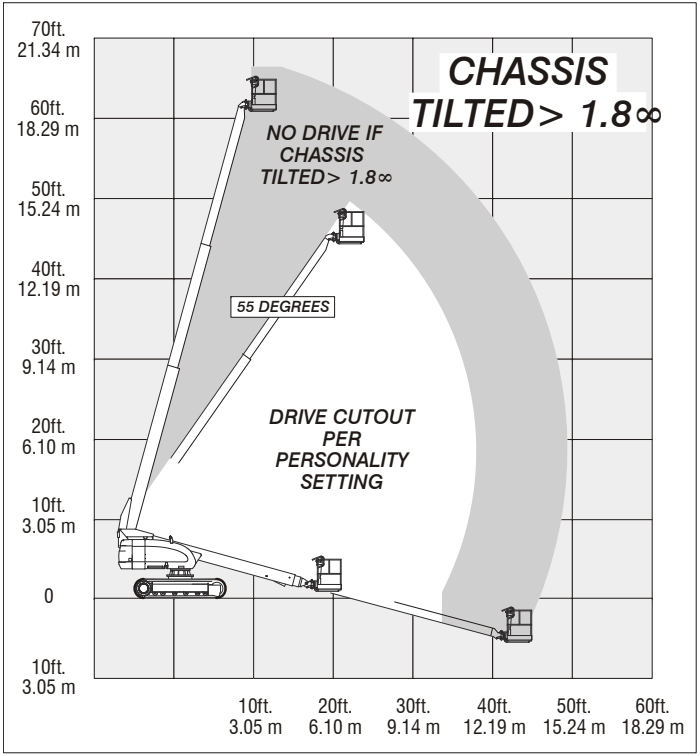

Figure 2-2. Drive Function Operating Range Diagrams - Sheet 2 of 3

NOTE: *In the Transport Mode, High Drive will be disabled above 10° elevation or past 3 feet (1 m) of boom extension.*

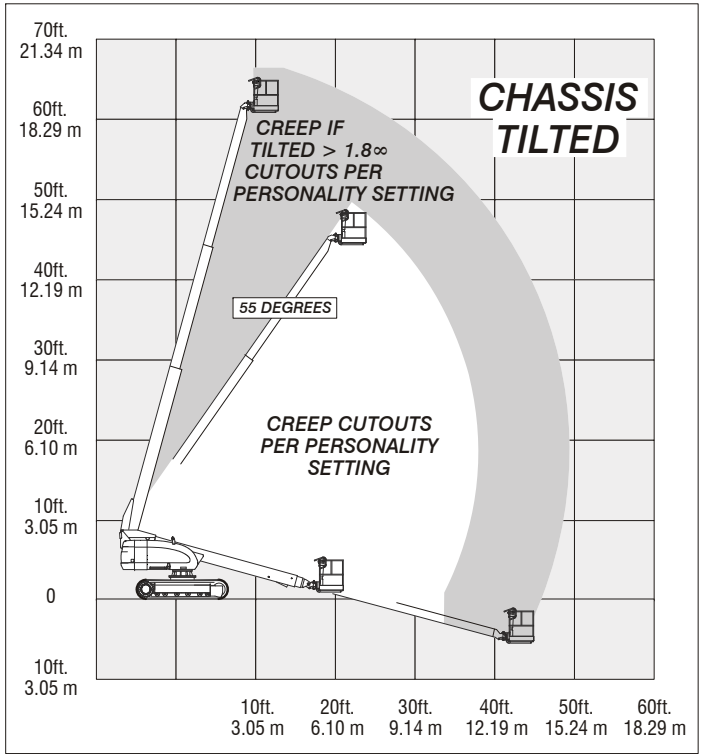

NOTE: *In the Transport Mode, High Drive will be disabled above 10° elevation or past 3 feet (1 m) of boom extension.*

Figure 2-3. Drive Function Operating Range Diagrams - Sheet 3 of 3

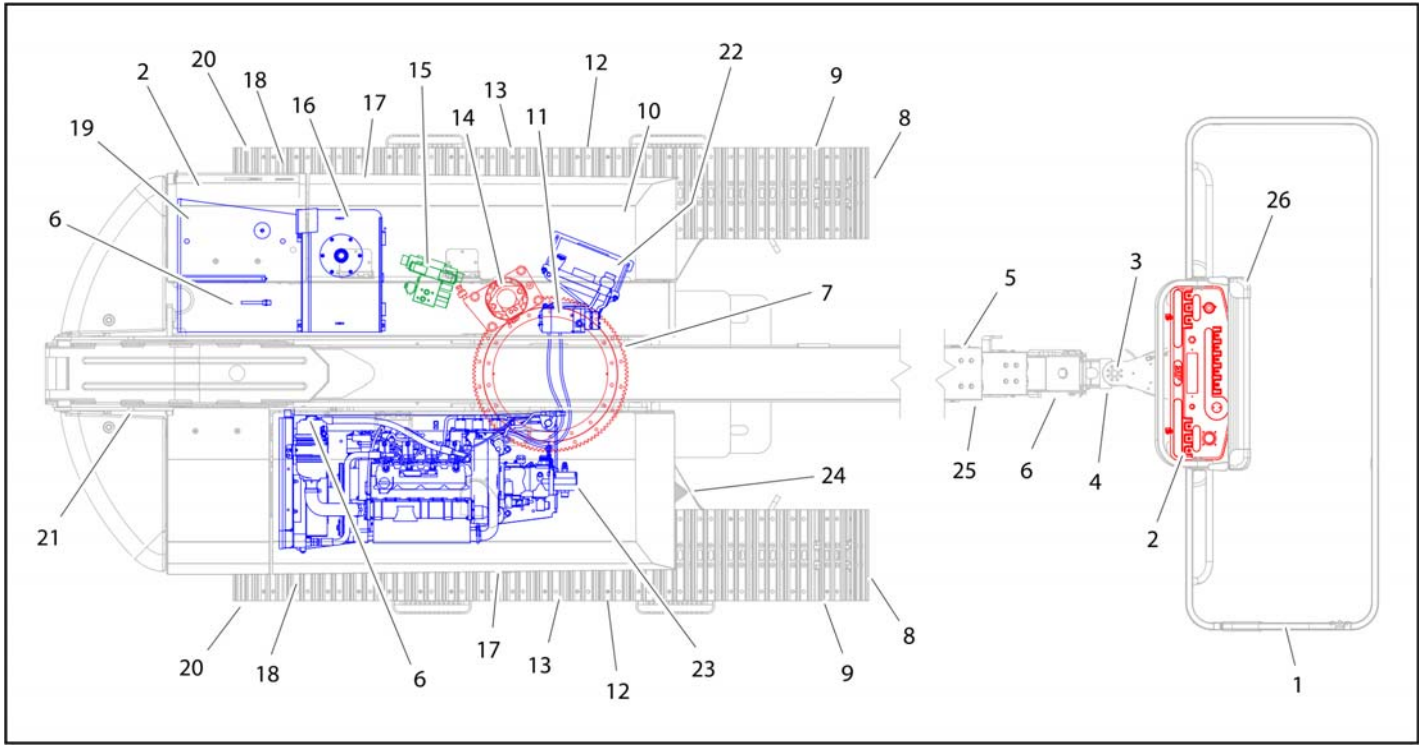

Figure 2-4. Daily Walk-Around Inspection Diagram

General

Begin the "Walk-Around Inspection" at Item 1, as noted on the diagram. Continue checking each item in sequence for the conditions listed in the following checklist.

WARNING

TO AVOID POSSIBLE INJURY, BE SURE MACHINE POWER IS OFF.

***INSPECTION NOTE**: On all components, make sure there are no loose or missing parts, that they are securely fastened, and no visible damage, leaks or excessive wear exists in addition to any other criteria mentioned.*

1. **Platform Assembly and Gate** - Footswitch works properly, not modified, disabled or blocked. Latch, stop, and hinges in working condition.
2. **Platform & Ground Control Consoles** - Switches and levers return to neutral, decals/placards secure and legible, control markings legible.
3. **Rotator** - See Inspection Note.
4. **Jib (If Equipped)** - See Inspection Note.

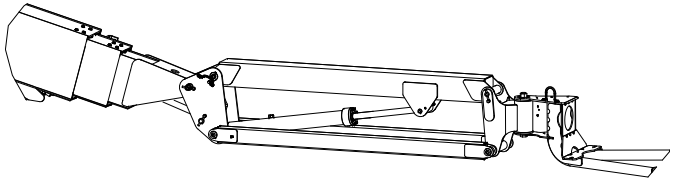

5. **Dual Capacity Limit Switch, Transport Position Limit Switch** - Switches operate properly.
6. **Power Track** - See Inspection Note.
7. **Turntable Bearing and Pinion** - No evidence of loose bolts or looseness between bearing and structure. See Inspection Note.
8. **Tracks** - Properly secured plates, no loose or missing track bolts, no dislocation of the track pins. Proper tension. See Inspection Note.
9. **Final Drive, Both Sides** - See Inspection Note.
10. **Turntable Lock** - Operable; See Inspection Note.

Figure 2-5. Daily Walkaround Inspection Points - Sheet 1 of 2

11. **Auxiliary Power Pump** - See Inspection Note.
12. **Bottom Rollers** - See Inspection Note.
13. **Track Carrier Roller, Both Sides** - See Inspection Note.
14. **Swing Drive Motor and Brake** - See Inspection Note.
15. **Control Valve** - See Inspection Note.
16. **Hydraulic Tank** - See Inspection Note.
17. **Hood Assemblies** - See Inspection Note.
18. **Tension Mechanism** - See Inspection Note.
19. **Fuel Tank** - See Inspection Note.
20. **Idler** - See Inspection Note.
21. **Dual Capacity Limit Switch** - Switch operates properly.
22. **Battery** - Proper electrolyte levels if adjustable; cables tight, no visible damage or corrosion.
23. **Hydraulic Pump** - See Inspection Note.
24. **Frame** - See Inspection Note.
25. **Main Boom Sections** - See Inspection Note.
26. **SkyGuard (If Equipped)** - See Inspection Note.

Figure 2-6. Daily Walkaround Inspection Points - Sheet 2 of 2

SECTION 3. MACHINE CONTROLS AND INDICATORS

3.1 GENERAL

NOTICE

THE MANUFACTURER HAS NO DIRECT CONTROL OVER MACHINE APPLICATION AND OPERATION. THE USER AND OPERATOR ARE RESPONSIBLE FOR CONFORMING WITH GOOD SAFETY PRACTICES.

This section provides the necessary information needed to understand control functions.

3.2 CONTROLS AND INDICATORS

NOTE: *All machines are equipped with control panels that use symbols to indicate control functions. On ANSI machines refer to decal located on the control box guard in front of the control box or by the ground controls for these symbols and the corresponding functions.*

NOTE: *The indicator panels use different shaped symbols to alert the operator to different types of operational situations that could arise. The meaning of those symbols are explained below.*

Indicates a potentially hazardous situation, which if not corrected, could result in serious injury or death. This indicator will be red.

Indicates an abnormal operating condition, which if not corrected, may result in machine interruption or damage. This indicator will be yellow.

Indicates important information regarding the operating condition, i.e. procedures essential for safe operation. This indicator will be green with the exception of the capacity indicator which will be green or yellow depending upon platform position.

Ground Control Station

(See Figure 3-1., Figure 3-2., Figure 3-3., and Figure 3-4.)

NOTE: *The Function Enable switch must be held down in order to operate Telescope, Swing, Lift, Jib Lift, Platform Level Override, and Platform Rotate functions.*

1. Platform Rotate

Provides rotation of the platform.

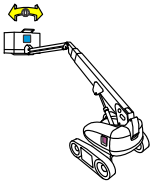

WARNING

ONLY USE THE PLATFORM LEVELING OVERRIDE FUNCTION FOR SLIGHT LEVELING OF THE PLATFORM. INCORRECT USE COULD CAUSE THE LOAD/OCCUPANT TO SHIFT OR FALL. FAILURE TO DO SO COULD RESULT IN DEATH OR SERIOUS INJURY.

2. Platform Leveling Override

A three position switch allows the operator to adjust the automatic self leveling system. This switch is used to adjust platform level in situations such as ascending/descending a grade.

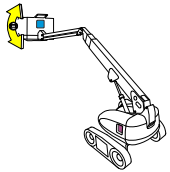

3. Jib (If Equipped)

This switch provides raising and lowering of the jib.

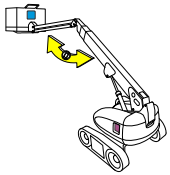

1. Platform Rotate
2. Platform Leveling Override
3. Not Used
4. Power/Emergency Stop
5. Engine Start/Auxiliary Power/Function Enable
6. Lift
7. Hourmeter
8. Platform/Ground Select Switch
9. Swing
10. Telescope
11. Indicator Panel

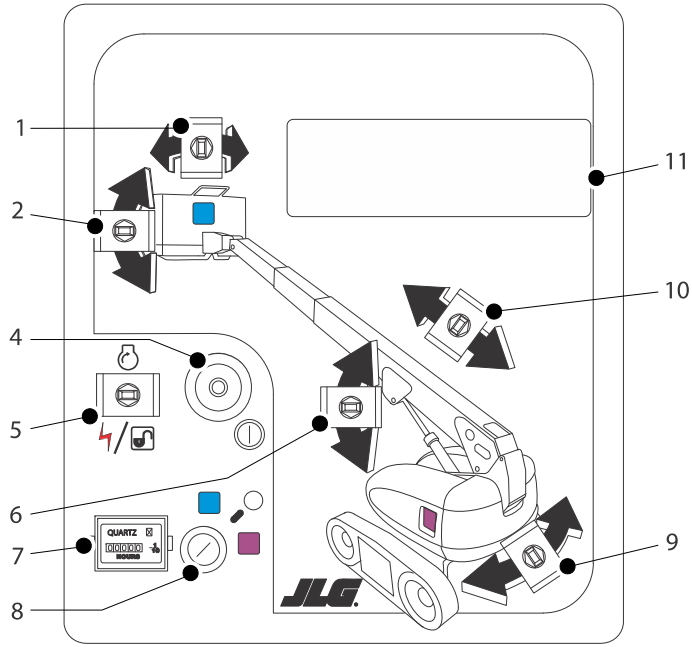

Figure 3-1. Ground Control Station - 600SC

1. Platform Rotate
2. Platform Leveling Override
3. Not Used
4. Power/Emergency Stop
5. Engine Start/Auxiliary Power/Function Enable
6. Lift
7. Hourmeter
8. Platform/Ground Select Switch
9. Swing
10. Telescope
11. Indicator Panel
12. Machine Safety System Override (MSSO)

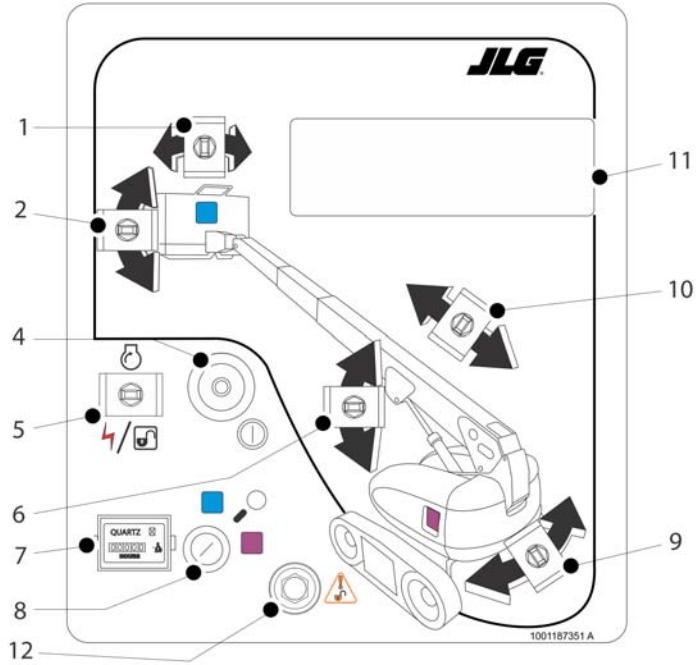

Figure 3-2. Ground Control Station - 600SC with Machine Safety System Override (MSSO) (CE Only)

1. Platform Rotate
2. Platform Leveling Override
3. Jib
4. Power/Emergency Stop
5. Engine Start/Auxiliary Power/Function Enable
6. Lift
7. Hourmeter
8. Platform/Ground Select Switch
9. Swing
10. Telescope
11. Indicator Panel

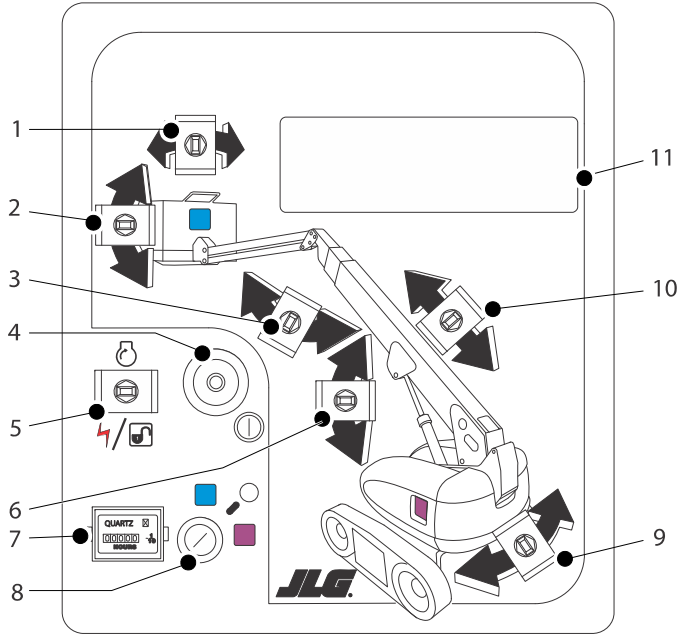

Figure 3-3. Ground Control Station - 660SJC

1. Platform Rotate
2. Platform Leveling Override
3. Jib
4. Power/Emergency Stop
5. Engine Start/Auxiliary Power/Function Enable
6. Lift
7. Hourmeter
8. Platform/Ground Select Switch
9. Swing
10. Telescope
11. Indicator Panel
12. Machine Safety System Override (MSSO)

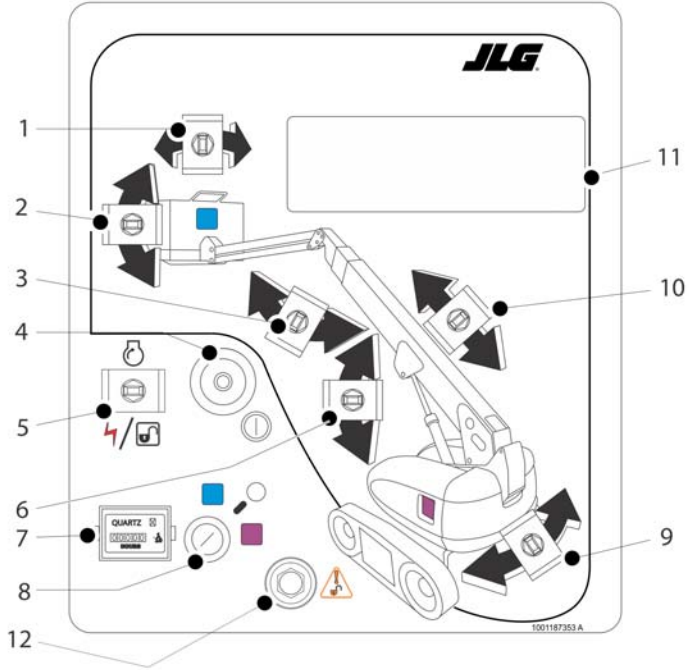

Figure 3-4. Ground Control Station - 660SJC with Machine Safety System Override (MSSO) (CE Only)

NOTE: *When Power/Emergency Stop switch is in the "ON" position and engine is not running, an alarm will sound, indicating Ignition is "ON".*

⚠ CAUTION

WHEN THE MACHINE IS SHUT DOWN THE MASTER/EMERGENCY STOP SWITCH MUST BE POSITIONED TO THE "OFF" POSITION TO PREVENT DRAINING THE BATTERY.

NOTE: *On machines with diesel engines, when Glow Plug Indicator is lighted (Yellow), wait until light goes out before cranking engine.*

4. Power/Emergency Stop Switch

A two-position red mushroom shaped switch supplies power to Platform/Ground Select switch when pulled out (on). When pushed in (off), power is shut off to the Platform/Ground Select switch.

NOTE: *When the Platform/Ground Select Switch is in the center position, power is shut off to the controls at both operating stations. Remove the key to prevent the controls from being actuated. The key is removable in the platform position on CE specification machines. The key must be available to ground personnel in the event of an emergency.*

5. Engine Start/ Auxiliary Power Switch /Function Enable

To start the engine, the switch must be held "Up" until the engine starts.

To use auxiliary power, the switch must be held "Down" for duration of auxiliary pump use.

When the engine is running, the switch must be held "Down" to enable all boom controls.

⚠ CAUTION

WHEN OPERATING ON AUXILIARY POWER, DO NOT OPERATE MORE THAN ONE FUNCTION AT A TIME. (SIMULTANEOUS OPERATION CAN OVERLOAD THE AUXILIARY PUMP MOTOR.)

6. Lift Control

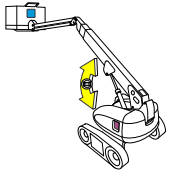

Provides raising and lowering of the boom.

7. Hourmeter

Registers the amount of time the machine has been in use with engine running.

NOTE: *When the Platform/Ground Select Switch is in the center position, power is shut off to the controls at both operating stations. Remove the key to prevent the controls from being actuated. The key is removable in the platform position on CE specification machines. The key must be available to ground personnel in the event of an emergency.*

8. Platform/Ground Select Switch

The three position, key operated switch supplies power to the platform control console when positioned to Platform. With the switch key turned to the Ground position only ground controls are operable.

WARNING

WHEN OPERATING THE BOOM ENSURE THERE ARE NO PERSONNEL AROUND OR UNDER PLATFORM.

WARNING

TO AVOID SERIOUS INJURY, DO NOT OPERATE MACHINE IF ANY CONTROL LEVERS OR TOGGLE SWITCHES CONTROLLING PLATFORM MOVEMENT DO NOT RETURN TO THE OFF POSITION WHEN RELEASED.

9. Swing Control

Provides 360 degrees continuous turntable rotation.

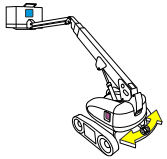

10. Telescope Control

Provides extension and retraction of the boom.

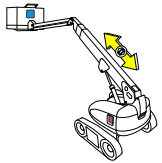

11. Machine Safety System Override (MSSO) (CE Only)

Provides emergency override of function controls that are locked out in the event of Load Sense System activation.

Ground Control Indictor Panel

(See Figure 3-5., Ground Control Indicator Panel)

1. No Alternator Output Indicator

Indicates a problem in the charging circuit, and service is required.

2. Engine Oil Pressure Indicator

Indicates that engine oil pressure is below normal and service is required.

3. Engine Oil Temperature Indicator (Deutz)

Indicates that the temperature of the engine oil, which also serves as engine coolant, is abnormally high and service is required.

4. System Distress Indicator

The light indicates that the JLG Control System has detected an abnormal condition and a Diagnostic Trouble Code has been set in the system memory. Refer to the Service Manual for instructions concerning the trouble codes and trouble code retrieval.

The system distress indicator light will illuminate for 2-3 seconds when the key is positioned to the on position to act as a self test.

5. Low Fuel Level Indicator

Indicates that the fuel level is 1/8 full or less. Illuminates when there are approximately four gallons of fuel remaining.

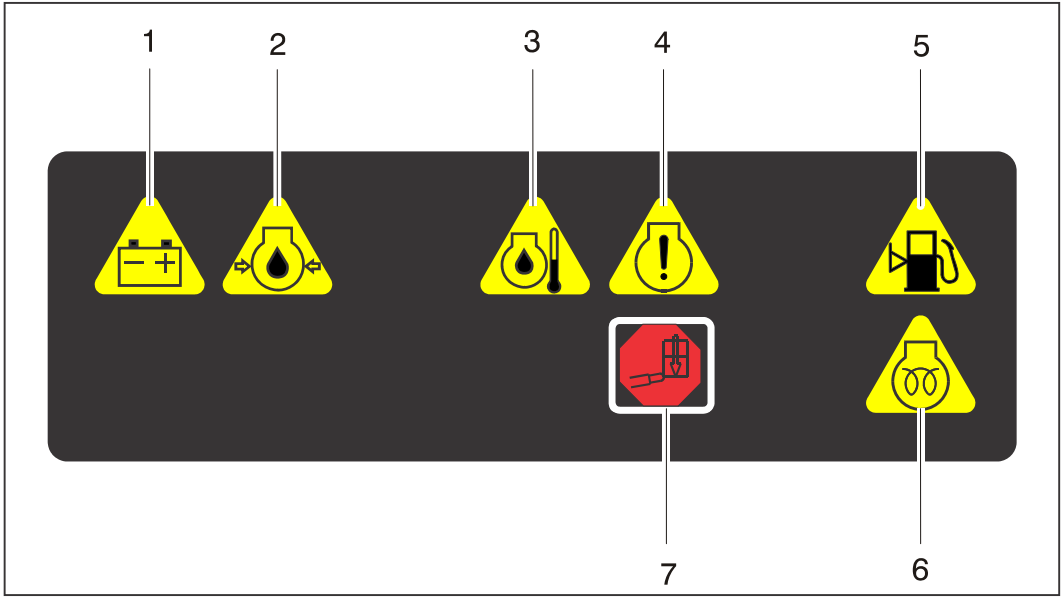

1. Battery Charging
2. Engine Oil Pressure
3. Engine Oil Temp.
4. Malfunction Indicator
5. Low Fuel
6. Glow Plug
7. Platform Overload

Figure 3-5. Ground Control Indicator Panel

6. Glow Plug/ Wait to Start Indicator

Indicates the glow plugs are on. The glow plugs are automatically turned on with the ignition circuit and remain on for approximately seven seconds. Start the engine only after the light goes out.

7. Platform Overload Indicator. (If Equipped)

Indicates the platform has been overloaded.

Platform Control Station

(See Figure 3-6., Platform Control Console)

WARNING

TO AVOID SERIOUS INJURY, DO NOT OPERATE MACHINE IF ANY CONTROL LEVERS OR TOGGLE SWITCHES CONTROLLING PLATFORM MOVEMENT DO NOT RETURN TO THE OFF OR NEUTRAL POSITION WHEN RELEASED.

1. Drive Speed/Torque Select

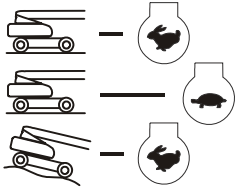

The machine has a three position switch.

The forward position gives maximum drive speed. The back position gives maximum torque for rough terrain, climbing grades, and sharp turns. The center position allows the machine to be driven as quietly as possible.

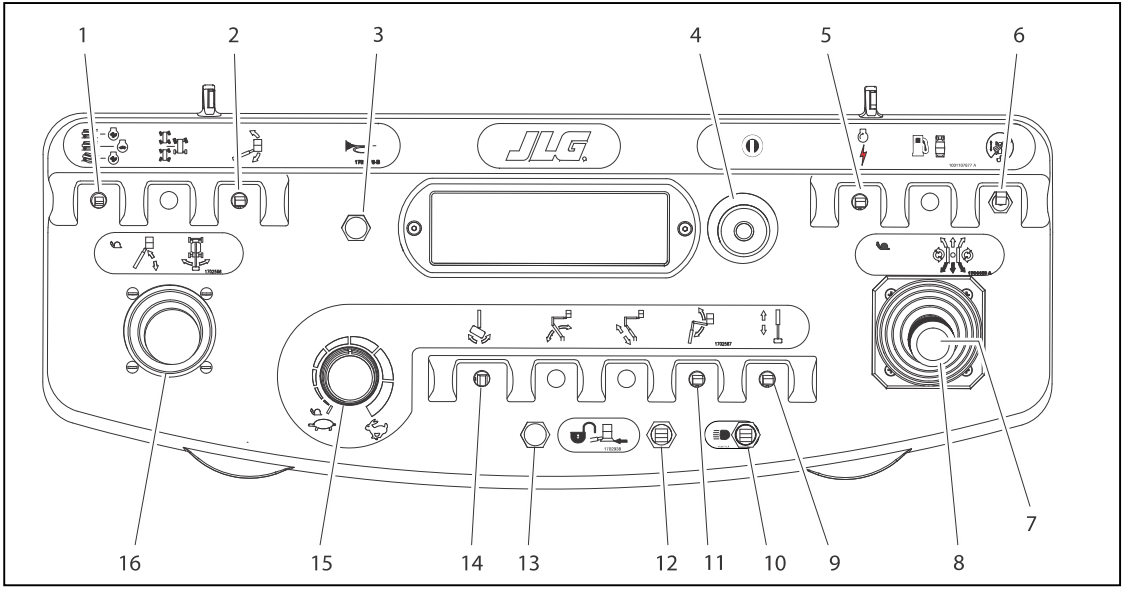

1. Drive Speed / Torque Select
2. Platform Level Override
3. Horn
4. Power/Emergency Stop
5. Start / Aux Power
6. Drive Orientation Override
7. Drive/Steer Enable
8. Drive Steer
9. Telescope
10. Lights
11. Jib
12. Soft Touch/SkyGuard Override
13. Soft Touch/SkyGuard Indicator
14. Platform Rotate
15. Function Speed Control
16. Main Lift / Swing

Figure 3-6. Platform Control Console

WARNING

ONLY USE THE PLATFORM LEVELING OVERRIDE FUNCTION FOR SLIGHT LEVELING OF THE PLATFORM. INCORRECT USE COULD CAUSE THE LOAD/OCCUPANT TO SHIFT OR FALL. FAILURE TO DO SO COULD RESULT IN DEATH OR SERIOUS INJURY.

2. Platform Leveling Override

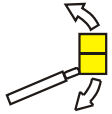

A three position switch allows the operator to adjust the automatic self leveling system. This switch is used to adjust platform level in situations such as ascending/descending a grade.

3. Horn

A push-type Horn switch supplies electrical power to an audible warning device when pressed.

4. Power/Emergency Stop Switch

A two-position red mushroom shaped switch furnishes power to Platform Controls when pulled out (on). When pushed in (off), power is shut off to the platform functions.

5. Start/Auxiliary Power

When pushed forward, the switch energizes the starter motor to start the engine.

The Auxiliary Power control switch energizes the electrically operated hydraulic pump. (Switch must be held on for duration of auxiliary pump use.)

The auxiliary pump functions to provide sufficient oil flow to operate the basic machine functions should the main pump or engine fail. The auxiliary pump will operate main boom lift, main telescope and swing.

6. Drive Orientation Override

When the boom is swung over the rear in either direction, the Drive Orientation indicator will illuminate when the drive function is selected. Push and release the switch, and within 3 seconds move the Drive/Steer control to activate drive or steer. Before driving, locate the black/white orientation arrows on both the chassis and the platform controls and match the control direction arrow to the intended chassis direction.

7. Drive/Steer Enable

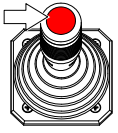

Located on the top of the Drive Steer Joystick, the button must be pushed in for the Drive/Steer control to function. If at any time the Enable Switch is pushed in and no function is operated for a period of 3 seconds, the switch will "time-out" and the switch must be cycled again to renew normal functions.

8. Drive/Steer

Proportional dual axis joystick is provided to control drive and steer. Push forward to drive straight forward. The joystick is proportional, with the drive speed increasing as the joystick is moved further from its neutral position. Moving the joystick forward and to the side steers the machine in the direction of the side displacement of the joystick. With the joystick positioned all the way to the side and slightly forward, the machine will turn in place with one track stopped and the other one turning the machine around the center of the stopped track.

Moving the joystick to the side (no dislocation in the forward or aft direction) will turn the machine by counter-rotation around the center of the machine by powering the tracks in opposite directions.

Pulling the joystick back and to the sides controls speed and direction of drive in reverse.

NOTE: *Both drive and steer functions work in the opposite direction when the boom is positioned over front of the chassis (over idler wheels).*

NOTE: *When boom is positioned above horizontal and any of the following switches, DRIVE SPEED/TORQUE SELECT or FUNCTION SPEED, are positioned to HIGH, high function speeds are automatically cut out and the machine continues to operate at a lower speed.*

NOTE: *The drive/steer control joystick can only command counter-rotate by being moved in the joystick's left - to - right axis, after first achieving the joystick neutral position.*

⚠ CAUTION

DO NOT OPERATE MACHINE IF DRIVE SPEED /TORQUE SELECT OR FUNCTION SPEED SWITCHES OPERATE WHEN BOOM IS ABOVE HORIZONTAL.

9. Telescope

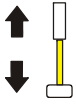

Provides extension and retraction of the main boom.

10. Lights (If Equipped)

This switch operates accessory light packages if the machine is so equipped.

11. Jib (If Equipped)

Push forward to lift up, pull back to lift down. Variable lift speed is using the Function Speed Control.

12. Platform Rotate

Provides rotation of the platform when positioned to the right or left.

13. Soft Touch/SkyGuard Override Switch (If equipped)

The machine can be equipped with one of three options. It may have Soft Touch, SkyGuard, or both Soft Touch and SkyGuard.

If equipped with Soft Touch, the switch enables the functions that were cut out by the Soft Touch system to operate again at creep speed, allowing the operator to move the platform away from the obstacle that caused the shutdown situation.

If equipped with SkyGuard, the switch enables functions cut out by the Skyguard system to be operated again, allowing the operator to resume use of machine functions.

If equipped with both Soft Touch and SkyGuard, the switch operates like described above and allows the operator to override the system that has experienced a cutout situation.

14. Soft Touch/SkyGuard Indicator (If Equipped)

Indicates the Soft Touch bumper is against an object or the SkyGuard sensor has been activated. All controls are cut out until the override button is pushed. For Soft Touch, controls are then active in the Creep Mode or for SkyGuard, controls will work normally.

15. Function Speed Control

Controls the speed of Boom and Swing Functions. Rotate counterclockwise for slower speed and clockwise for faster speed. To adjust to creep, turn knob fully counterclockwise until it clicks.

NOTE: *To operate the Main Boom Lift/Swing joystick, pull up on the locking ring below the handle.*

NOTE: *The Main Boom Lift/Swing joystick is spring loaded and will automatically return to neutral (off) position when released.*

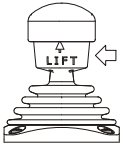

16. Main Lift/Swing Controller

Provides main lift and swing. Push forward to lift up, pull backward to boom down. Move right to swing right, move left to swing left. Moving the joystick activates switches to provide the functions selected.

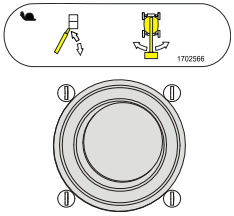

Platform Control Indicator Panel

(See Figure 3-7., Platform Control Indicator Panel)

1. Tilt Alarm Warning Light and Alarm

Indicates that the chassis is on a slope. An alarm will also sound when the chassis is on a slope and the boom is above horizontal. If lit when boom is raised or extended, retract and lower to below horizontal then reposition machine so that it is level before continuing operation. If the boom is above horizontal and the machine is on a slope, the tilt alarm warning light will illuminate and an alarm will sound and CREEP is automatically activated.

⚠ WARNING

IF TILT WARNING LIGHT IS ILLUMINATED WHEN BOOM IS RAISED OR EXTENDED, RETRACT AND LOWER TO BELOW HORIZONTAL THEN REPOSITION MACHINE SO THAT IT IS LEVEL BEFORE EXTENDING BOOM OR RAISING BOOM ABOVE HORIZONTAL.

2. Platform Overload Indicator (If Equipped)

Indicates the platform has been overloaded.

3. Capacity Indicator

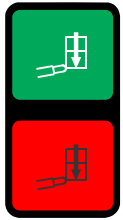

Indicates the maximum platform capacity for the current position of the platform. Restricted capacities are permitted at restricted platform positions (shorter boom lengths and higher boom angles).

NOTE: *Refer to the capacity decals on the machine for restricted and unrestricted platform capacities.*

4. Drive Disabled Indicator

When illuminated, the drive function has been disabled. (Refer to Drive Function Operating Range Diagrams in Section 2).

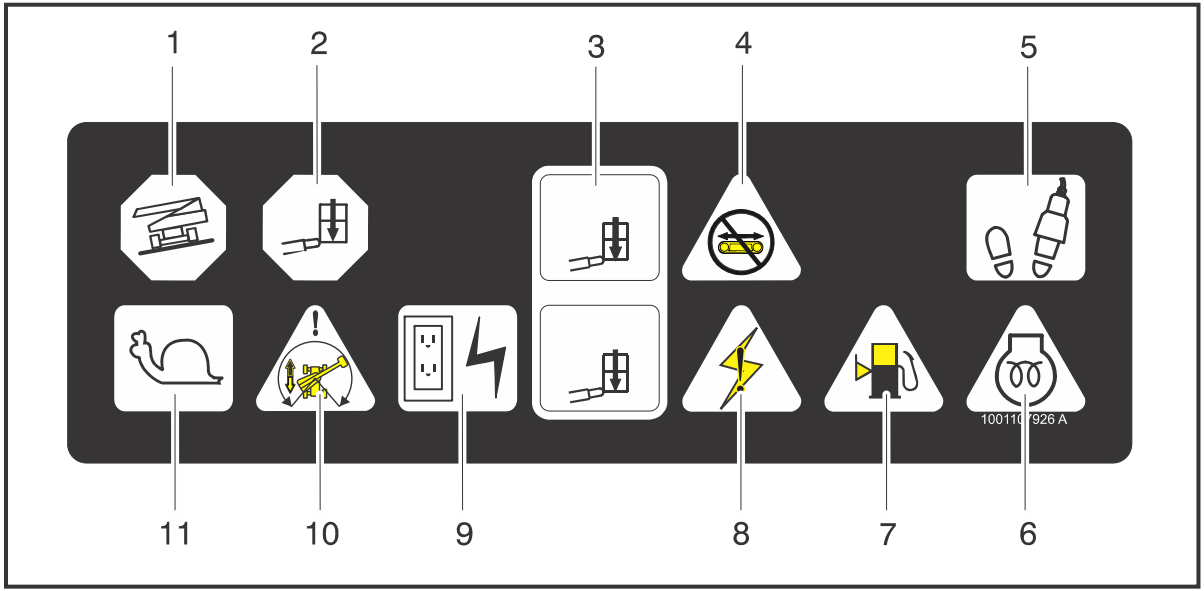

1. Tilt Alarm Warning
2. Platform Overload
3. Platform Capacity
4. Drive Disabled
5. Footswitch/Enable
6. Glow Plug
7. Low Fuel
8. System Distress
9. AC Generator
10. Not Used
11. Creep Speed
12. Drive Orientation

Figure 3-7. Platform Control Indicator Panel

5. Footswitch/Enable Indicator

To operate any function, the footswitch must be depressed and the function selected within seven seconds. The enable indicator shows that the controls are enabled. If a function is not selected within seven seconds, or if a seven second lapse between ending one function and beginning the next function, the enable light will go out and the footswitch must be released and depressed again to enable the controls.

Releasing the footswitch removes power from all controls and applies the drive brakes.

WARNING

TO AVOID SERIOUS INJURY, DO NOT REMOVE, MODIFY OR DISABLE THE FOOTSWITCH BY BLOCKING OR ANY OTHER MEANS.

WARNING

FOOTSWITCH MUST BE ADJUSTED IF FUNCTIONS ACTIVATE WHEN SWITCH ONLY OPERATES WITHIN LAST 1/4" OF TRAVEL, TOP OR BOTTOM.

6. Glow Plug/Wait to Start Indicator

Indicates the glow plugs are operating. After turning on ignition, wait until light goes out before cranking engine.

7. Low Fuel Indicator.

Indicates the fuel tank is 1/8 full or less. When the light first turns on, there are approximately four usable gallons of fuel remaining.

8. System Distress Indicator

The light indicates that the JLG Control System has detected an abnormal condition and a Diagnostic Trouble Code has been set in the system memory. Refer to the Service Manual for instructions concerning the trouble codes and trouble code retrieval.

9. AC Generator

Indicates the generator is in operation..

10. Drive Orientation Indicator

When the boom is swung beyond the rear in either direction, the Drive Orientation indicator will illuminate when the drive function is selected. This is a signal for the operator to verify that the drive control is being operated in the proper direction (i.e. controls reversed situations).

11. Creep Speed Indicator

When the Function Speed Control is turned to the creep position, the indicator acts as a reminder that all functions are set to the slowest speed. The light flashes if the control system puts the machine into creep speed and will be on continuously if the operator selects creep speed..

SECTION 4. MACHINE OPERATION

4.1 DESCRIPTION

This machine is a self-propelled hydraulic lift equipped with a work platform on the end of an elevating and rotating boom.

The primary operator control station is in the platform. From this control station, the operator can drive and steer the machine in both forward and reverse directions. The operator can raise or lower the upper or lower boom or swing the boom to the left or right. Standard boom swing is 360 degree continuous left and right of the stowed position. The machine has a Ground Control Station which will override the Platform Control Station. Ground Controls operate Boom Lift and Swing, and are to be used in an emergency to lower the platform to the ground should the operator in the platform be unable to do so.

4.2 OPERATING CHARACTERISTICS AND LIMITATIONS

Capacities

The boom can be raised above horizontal with or without any load in platform, if:

1. Machine is positioned on a smooth, firm and level surface.
2. Load is within manufacturer's rated capacity.
3. All machine systems are functioning properly.
4. Machine is as originally equipped from JLG.

Stability

Machine stability is based on two positions which are called FORWARD STABILITY and BACKWARD STABILITY. The machines position of Least Backward Stability is shown in Figure 4-1., and its position of Least Forward Stability is shown in Figure 4-2.

⚠ WARNING

TO AVOID FORWARD OR BACKWARD UPSET, DO NOT OVERLOAD MACHINE OR OPERATE ON AN OUT-OF-LEVEL SURFACE.

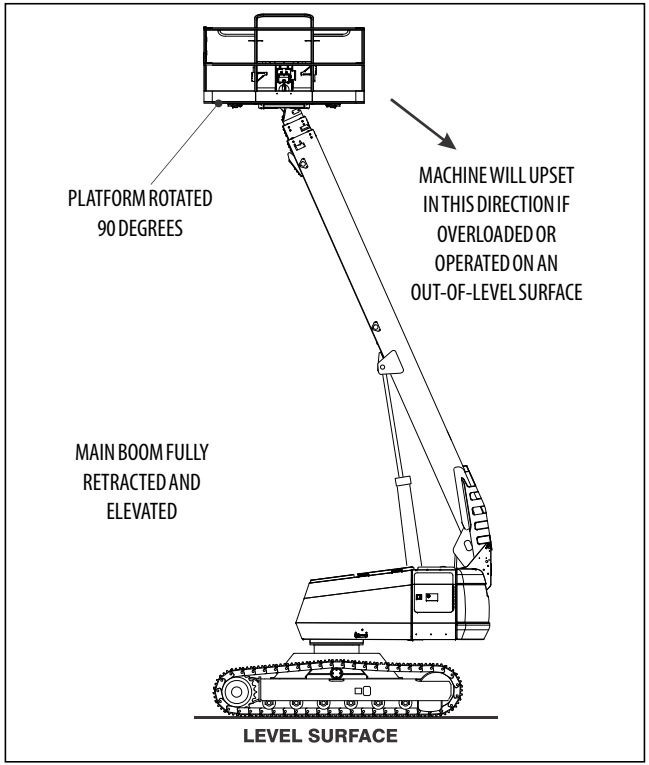

Figure 4-1. Position of Least Backward Stability

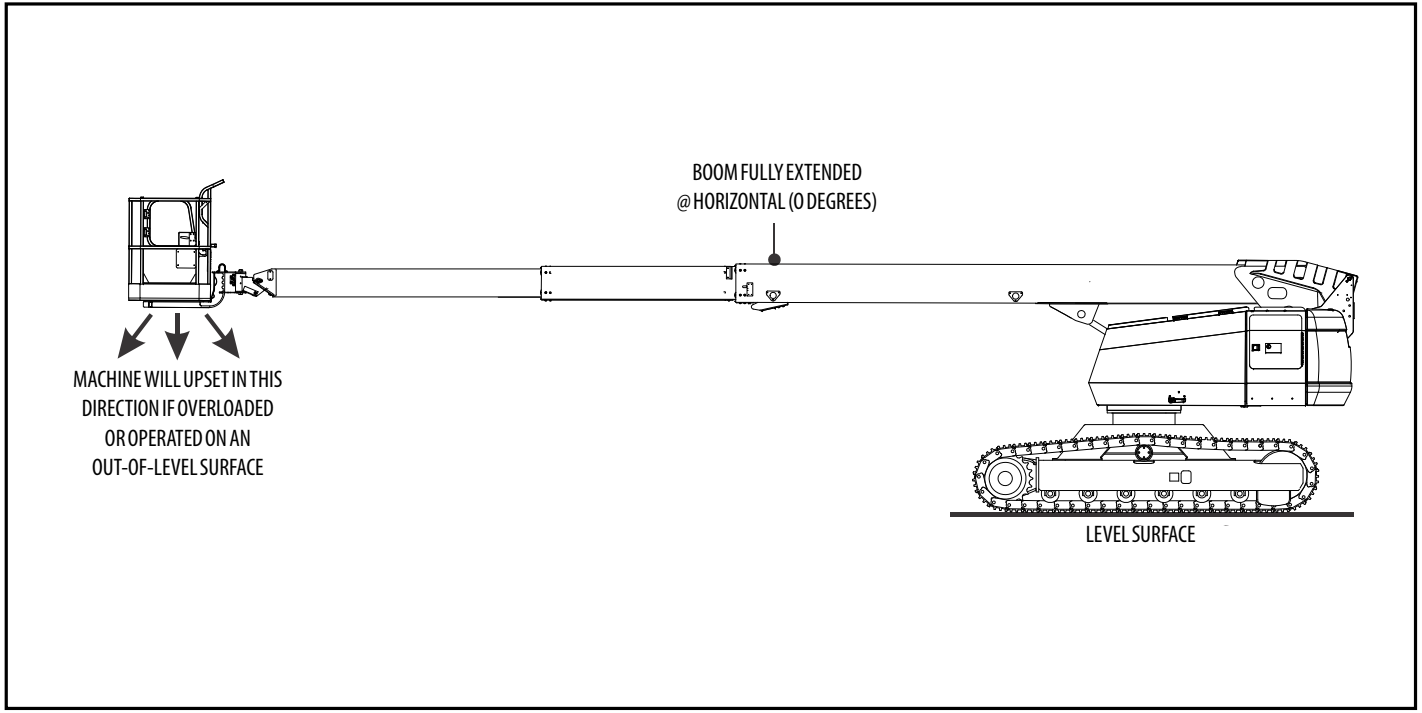

Figure 4-2. Position of Least Forward Stability

4.3 ENGINE OPERATION

NOTE: *Initial starting should always be performed from the Ground Control station.*

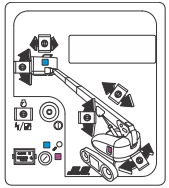

Starting Procedure

⚠ CAUTION

IF ENGINE FAILS TO START PROMPTLY, DO NOT CRANK FOR AN EXTENDED PERIOD. SHOULD ENGINE FAIL TO START ONCE AGAIN, ALLOW STARTER TO "COOL OFF" FOR 2-3 MINUTES. IF ENGINE FAILS AFTER SEVERAL ATTEMPTS, REFER TO ENGINE MAINTENANCE MANUAL.

NOTE: *After turning on ignition, operator must wait until glow plug indicator light goes out before cranking engine.*

1. Turn key of Platform/Ground Select switch to Ground.

2. Pull the Power/Emergency Stop switch to On.

3. Push the Engine Start switch until engine starts.

⚠ CAUTION

ALLOW ENGINE TO WARM-UP FOR A FEW MINUTES AT LOW SPEED BEFORE APPLYING ANY LOAD.

4. After engine has had sufficient time to warm up, push in the Power/Emergency Stop switch and shut engine off.

5. Turn Platform/Ground Select switch to Platform.

6. From Platform, pull Power/Emergency Stop switch out.

7. Push the Engine Start switch until engine starts.

NOTE: *Footswitch must be in released (up) position before starter will operate. If starter operates with footswitch in the depressed position, DO NOT OPERATE MACHINE.*

Shutdown Procedure

⚠ CAUTION

IF AN ENGINE MALFUNCTION CAUSES AN UNSCHEDULED SHUTDOWN, DETERMINE THE CAUSE AND CORRECT IT BEFORE RESTARTING THE ENGINE.

1. Remove all load and allow engine to operate at low speed setting for 3-5 minutes; this allows for further reduction of internal engine temperature.
2. Push Power/Emergency Stop switch in.

3. Turn Platform/Ground Select switch to Off.

Refer to Engine Manufacturer's manual for detailed information.

4.4 TRAVELING (DRIVING)

See Figure 4-3., Grades and Sideslopes.

NOTE: *Refer to the Operating Specifications table for Gradeability and Sideslope ratings.*

All ratings for Gradeability and Sideslope are based upon the machine's boom being in the stowed position, fully lowered, and retracted.

Traveling is limited by two factors:

1. Gradeability, which is the percent of grade of the incline the machine can climb.
2. Sideslope, which is the angle of the slope the machine can be driven across.

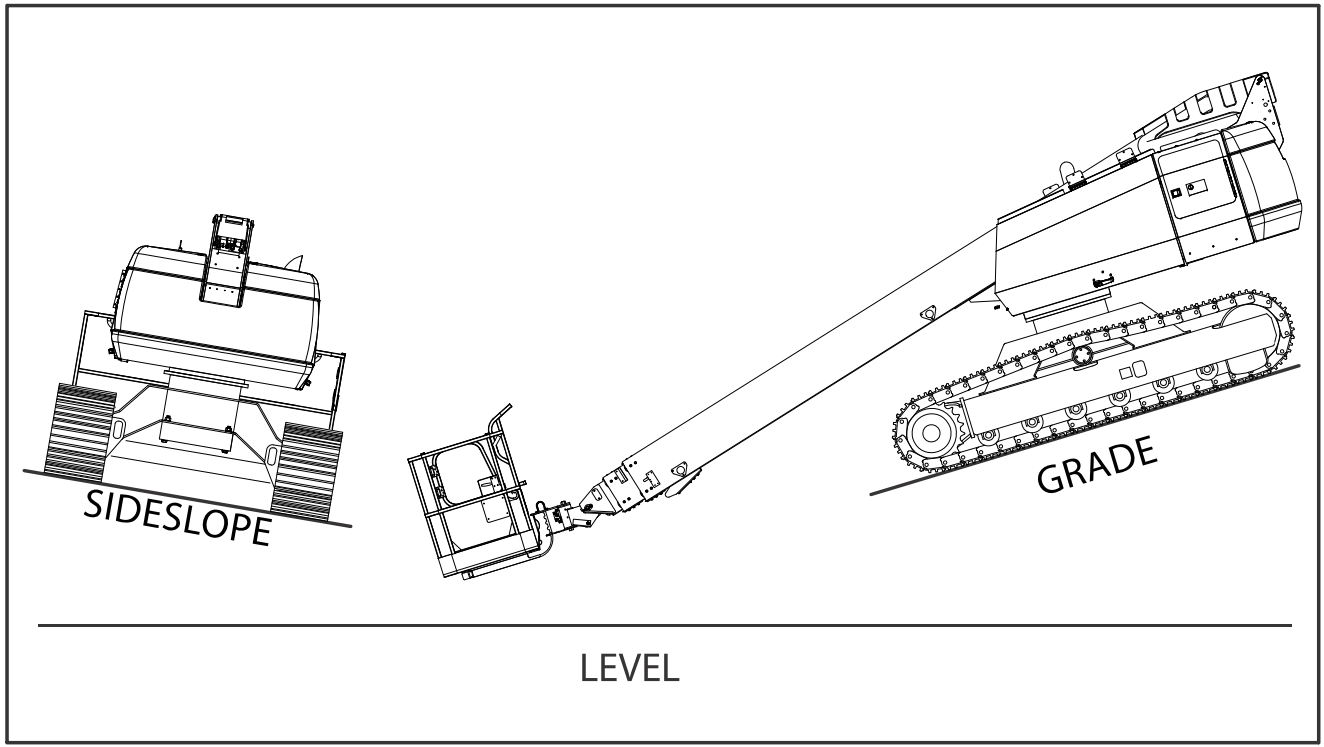

Figure 4-3. Grades and Sideslopes

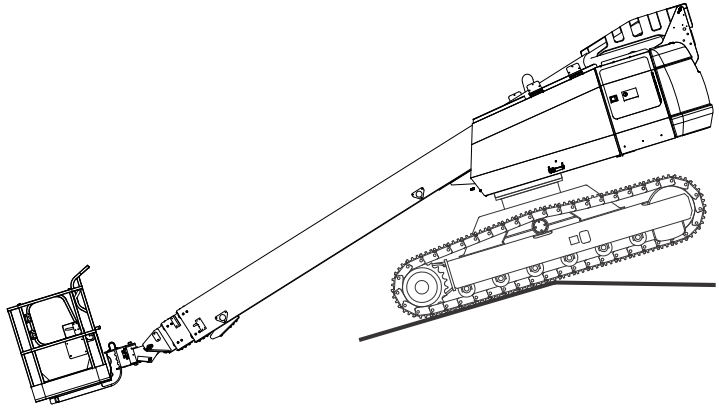

⚠ WARNING

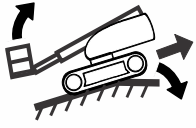

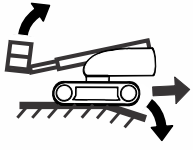

MACHINE MOTION HAZARD

Use extreme caution when approaching the edge of any terrain obstacle. Check for curbs, large stones or other terrain obstacles including overhead obstacles as machine may make abrupt pivoting motion when center of gravity (center of track frame) shifts over an edge. Travel slowly over obstacles to minimize pivoting motion.

Failure to follow these instructions could result in death or serious injury.

1704468 A

Figure 4-4. Machine Motion Hazard

WARNING

DO NOT DRIVE WITH BOOM EXTENDED OR ABOVE HORIZONTAL EXCEPT ON A SMOOTH, FIRM AND LEVEL SURFACE.

TO AVOID LOSS OF TRAVEL CONTROL OR UPSET ON GRADES AND SIDESLOPES, DO NOT DRIVE MACHINE ON GRADES OR SIDESLOPES EXCEEDING THOSE SPECIFIED ON MANUFACTURERS NAMEPLATE LOCATED ON THE FRAME.

ENSURE THAT TURNTABLE LOCK IS ENGAGED BEFORE BEGINNING ANY EXTENDED TRAVELING. AVOID ANY TERRAIN FEATURES WHICH COULD CAUSE THE MACHINE TO UPSET.

DRIVE SPEED/TORQUE SELECT SWITCH SHOULD BE IN THE BACKWARD POSITION FOR:

- **TRAVELING GRADES**
- **TRAVELING IN DIFFICULT CONDITIONS**
- **SHARP TURNS (ESPECIALLY WITH ONE TRACK STOPPED**
- **COUNTERROTATION**

USE EXTREME CAUTION WHEN DRIVING IN REVERSE AND AT ALL TIMES WHEN DRIVING WITH THE PLATFORM ELEVATED AND SPECIALLY WHEN DRIVING WITH ANY PART OF THE MACHINE WITHIN 6 FEET (2M) OF AN OBSTRUCTION. DO NOT USE DRIVE TO MANEUVER PLATFORM CLOSE TO AN OBSTRUCTION. USE ONE OF THE BOOM FUNCTIONS.

WARNING

USE EXTREME CAUTION WHEN APPROACHING A CREST OF ANY TERRAIN OBSTACLE. CHECK FOR CURBS, LARGE STONES, OR OTHER TERRAIN OBSTACLES INCLUDING OVERHEAD OBSTACLES AS THE MACHINE WILL MAKE UNCONTROLLED PIVOTING MOTIONS WHEN THE CENTER OF GRAVITY (CENTER OF TRACK FRAME) SHIFTS OVER AN EDGE. SLOW DOWN TO MINIMIZE ACCELERATION DURING PIVOTING MOVEMENT.

BEFORE DRIVING, MAKE SURE THE BOOM IS POSITIONED OVER THE REAR OF THE CHASSIS (OVER FINAL DRIVES AND SPROCKETS). IF THE BOOM IS OVER THE FRONT OF THE CHASSIS (OVER THE IDLER WHEELS) STEER AND DRIVE CONTROLS WILL MOVE IN OPPOSITE DIRECTIONS TO MACHINE CONTROLS.

Traveling Forward or Reverse

1. At Platform Controls, with the engine running, pull out Emergency Stop switch and activate footswitch.

2. Position Drive control to Forward or Reverse as desired.

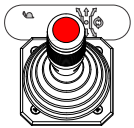

3. Depress footswitch, move joystick (Drive/Steer Control) to select desired direction of travel (forward or reverse), move Drive/Steer control to Right for smooth turn to right and Left for smooth turn to left.

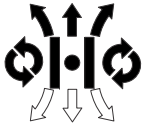

4. To obtain sharp turns, move Drive Speed/Torque Select switch to the back position, slow down the travel speed and move the Drive control lever to Right for a turn to the right and to Left for a turn to the left. The sharpest possible turn is achieved when the joystick is in the position to command one track to stop and the other to move slowly.

CAUTION

TURN IN PLACE ONLY IN AN AREA FREE OF OBSTACLES AND ONLY WITH THE BOOM FULLY RETRACTED. USE SLOW, GENTLE CONTROL MOVEMENTS AND DO NOT OPERATE ANY OTHER FUNCTIONS DURING COUNTER-ROTATION.

5. To obtain counter-rotation (turn in place), stop the machine, move the Drive/Steer control lever directly to Right to get clockwise rotation and to Left to get counterclockwise rotation.

6. To obtain maximum travel speed, position the Drive controller to Fast and activate the following switches:
   a. Position Drive Speed/Torque Select switch to Fast. (Forward Position)

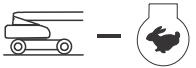

7. Prior to stopping the machine, position switches as follows:
   a. Position Drive Speed/Torque Select switch to Low. (Backward Position)

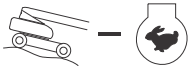

8. For traveling up grades, position switches as follows:
   a. Position Drive Speed/Torque Select switch to High. (Backward position)

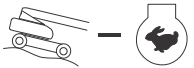

NOTE: *For smoother operation when driving with fully extended boom, place Drive control to Slow before stopping.*

This machine is equipped with a Drive Orientation Indicator. The yellow light on the platform control console indicates that the boom is swung beyond the rear and the machine may Drive/Steer in the opposite direction from the movement of the controls. If the indicator is illuminated, operate the Drive function in the following manner:

1. Match the black and white direction arrows on both platform control panel and the chassis to determine the direction the machine will travel.

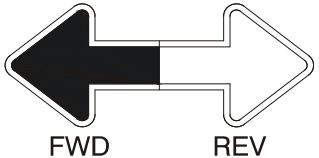

2. Push and release the Drive Orientation Override switch. Within 3 seconds, slowly move the Drive control toward the arrow matching the intended direction of machine travel. The indicator light will flash during the 3 second interval until the drive function is selected.

Traveling on a Grade

When traveling a grade, maximum braking and traction are obtained with the boom stowed, in position over the rear drive, and in line with the direction of travel. Drive the machine forward when climbing a grade, and in reverse when descending a grade. Do not exceed the machine's maximum rated gradability.

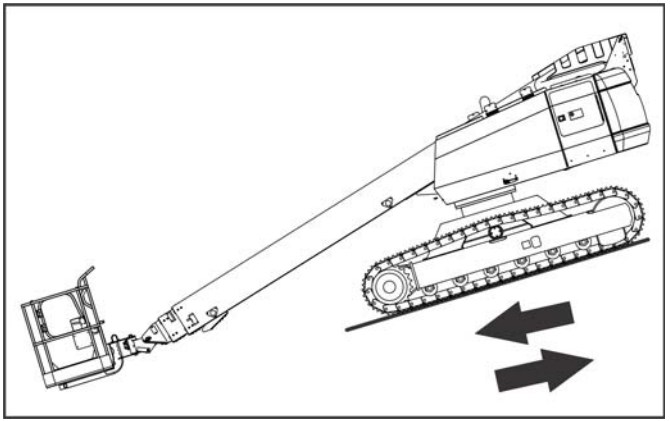

Figure 4-5. Traveling on a Grade

NOTICE

IF THE BOOM IS OVER THE FRONT, DIRECTION OF STEER AND DRIVE MOVEMENT WILL BE OPPOSITE FROM THE MOVEMENT OF THE CONTROLS.

4.5 PARKING AND STOWING

Park and stow machine as follows:

1. Park machine in travel position; boom lowered over rear, all access panels and doors closed and secured, ignition off, turntable locked.
2. Check that brakes hold machine in position.
3. Chock tracks front and rear.
4. Turn off Platform Select switch and remove key.
5. When parking on frozen ground overnight, drive the machine up on boards to prevent freezing to the ground.

4.6 PLATFORM

Platform Level Adjustment

WARNING

ONLY USE THE PLATFORM LEVELING OVERRIDE FUNCTION FOR SLIGHT LEVELING OF THE PLATFORM. INCORRECT USE COULD CAUSE THE LOAD/OCCUPANTS TO SHIFT OR FALL. FAILURE TO DO SO COULD RESULT IN DEATH OR SERIOUS INJURY.

To Level Up or Down - Position the Platform/Level control switch Up or Down and hold until the platform is level.

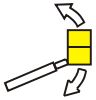

Platform Rotation

To rotate the platform to the left or right, use the Platform Rotate control switch to select the direction and hold until desired position is reached.

4.7 BOOM

WARNING

A RED TILT ALARM WARNING LIGHT, LOCATED ON THE CONTROL CONSOLE, LIGHTS WHEN THE CHASSIS IS ON A SEVERE SLOPE (5 DEGREES OR GREATER). DO NOT SWING, EXTEND OR RAISE MAIN BOOM ABOVE HORIZONTAL WHEN LIT.

DO NOT DEPEND ON TILT ALARM AS A LEVEL INDICATOR FOR THE CHASSIS. TILT ALARM INDICATES CHASSIS IS ON A SEVERE SLOPE (5 DEGREES OR GREATER). CHASSIS MUST BE LEVEL BEFORE SWINGING, EXTENDING OR RAISING BOOM ABOVE HORIZONTAL.

TO AVOID UPSET, IF RED TILT ALARM WARNING LIGHT LIGHTS WHEN MAIN BOOM IS EXTENDED OR RAISED ABOVE HORIZONTAL, RETRACT AND LOWER PLATFORM TO NEAR GROUND LEVEL. THEN REPOSITION MACHINE SO THAT CHASSIS IS LEVEL BEFORE EXTENDING OR RAISING MAIN BOOM.

TRAVELING WITH MAIN BOOM RETRACTED AND BELOW HORIZONTAL IS PERMITTED ON GRADES AND SIDE SLOPES SPECIFIED ON CAUTION PLACARD AT PLATFORM.

TO AVOID SERIOUS INJURY, DO NOT OPERATE MACHINERY IF ANY CONTROL LEVERS OR TOGGLE SWITCHES CONTROLLING PLATFORM MOVEMENT DO NOT RETURN TO THE OFF OR NEUTRAL POSITION WHEN RELEASED.

TO AVOID A COLLISION AND INJURY IF PLATFORM DOES NOT STOP WHEN A CONTROL SWITCH OR LEVER IS RELEASED, REMOVE FOOT FROM FOOTSWITCH OR USE EMERGENCY STOP TO STOP THE MACHINE.

Swinging the Boom

To swing boom, use Swing control switch to select Right or Left direction.

NOTICE

WHEN SWINGING THE BOOM MAKE SURE THERE IS AMPLE ROOM FOR THE BOOM TO CLEAR SURROUNDING WALLS, PARTITIONS AND EQUIPMENT.

NOTE: *On CE Market machines, when boom functions are being operated there is an interlock that prevents the use of Drive and Steer functions.*

Raising and Lowering the Main Boom

To raise or lower the Main Boom, position the Main Boom Lift switch to Up or Down until the desired height is reached.

Telescoping the Main Boom

To extend or retract the main boom, use the Main Telescope Control Switch to select In or Out movement.

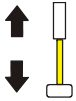

4.8 SHUT DOWN AND PARK

1. Drive machine to a protected area.
2. Assure main boom is fully retracted and lowered over rear of the machine; all access panels and doors closed and secured.
3. Remove all load and allow engine to operate 3-5 minutes at Low setting to permit reduction of engine internal temperatures.
4. At Ground Controls, turn Key Select switch to (center) Off position. Position Power/Emergency Stop switch (down) to Off position. Remove key.
5. Cover Platform Control console to protect instruction placards, warning decals and operating controls from hostile environment.

4.9 MACHINE SAFETY SYSTEM OVERRIDE (MSSO)(CE ONLY)

The Machine Safety System Override (MSSO) is used to override function controls for Emergency Platform Retrieval only. Refer to Section 5.4, Machine Safety System Override (MSSO)(CE Only) for operating procedures.

4.10 SKYGUARD OPERATION

Skyguard is used to provide enhanced control panel protection. When the SkyGuard sensor is activated, functions that were in use at the time of actuation will reverse or cutout. The table below outlines these functions.

Table 4-1. Skyguard Function Table

Main Lift	Main Tele In	Main Tele Out	Swing	Drive Forward		Drive Reverse		Tower Lift Up	Tower Lift Down	Platform Level	Platform Rotate	Jib Lift
				DOS Enabled	DOS Not Enabled	DOS Enabled	DOS Not Enabled					
R	C	R	R	C	C*	C	C	R	C	C	C	C
R = Indicates Reversal is Activated												
C = Indicates Cutout is Activated												
* Disregard when boom is in line and driving forward with or without steering and no other functions active.												

4.11 TIE DOWN AND LIFTING

Tie Down

NOTICE

WHEN TRANSPORTING THE MACHINE, THE BOOM MUST BE FULLY LOWERED INTO THE BOOM REST.

1. Place the boom in the stowed position with the turntable locked.
2. Remove all loose items from the machine.
3. Secure the chassis and the platform using straps or chains of adequate strength and attached to the designated tie down points.

Lifting

(See Figure 4-6., Lifting Chart)

1. Weigh the individual unit, refer to the Serial Number plate or call JLG Industries to find out the Gross Vehicle Weight.
2. Place the boom in the stowed position with the turntable locked.
3. Remove all loose items from the machine.
4. Attach lifting device and equipment only to the designated lifting points.
5. Properly adjust the rigging to prevent damage to the machine and so the machine remains level.

4.12 AUXILIARY POWER

A toggle type auxiliary power control switch is located on the platform control station and another is located on the ground control station. Operation of either switch turns on the electrically driven auxiliary hydraulic pump. This should be used in case of failure of the main power plant. The auxiliary pump will operate boom lift, telescope and swing. To activate auxiliary power:

Activating from the Platform Control Station

1. Position Platform/Ground Select Key Switch to Platform.

2. Position Power/Emergency Stop switch to On.

3. Depress and hold footswitch.

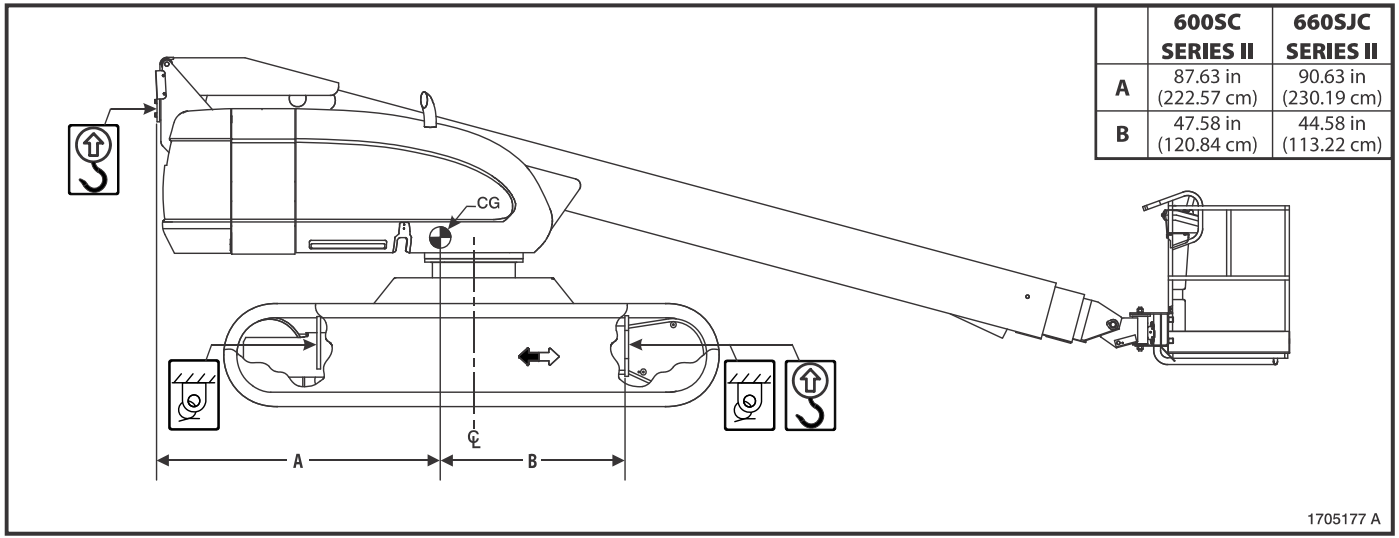

	600SC SERIES II	660SJC SERIES II
A	87.63 in (222.57 cm)	90.63 in (230.19 cm)
B	47.58 in (120.84 cm)	44.58 in (113.22 cm)

Figure 4-6. Lifting Chart

4. Position Auxiliary Power switch to On and hold.

5. Operate appropriate control switch, lever or controller for desired function and hold.
6. Release Auxiliary Power switch, selected control switch, lever or controller, and footswitch.
7. Position Power/Emergency Stop switch to Off.

Activating from the Ground Control Station

1. Position Platform/Ground Select Key Switch to Ground.

2. Position Power/Emergency Stop switch to On.

3. Position Auxiliary Power switch to On and hold.

4. Operate appropriate control switch or controller for desired function and hold.
5. Release Auxiliary Power switch, and appropriate control switch or controller.
6. Position Power/Emergency Stop switch to Off.

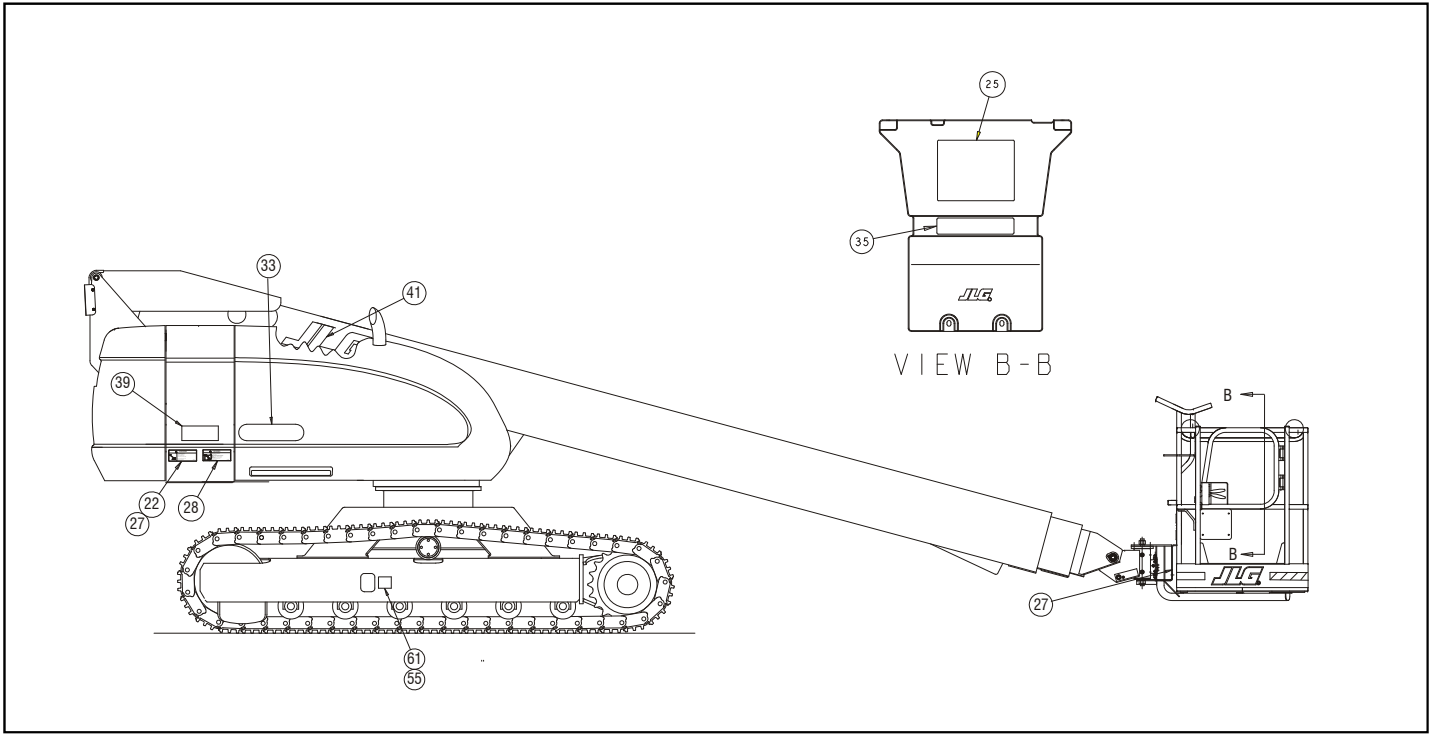

Figure 4-7. Decal Installation - Sheet 1 of 6

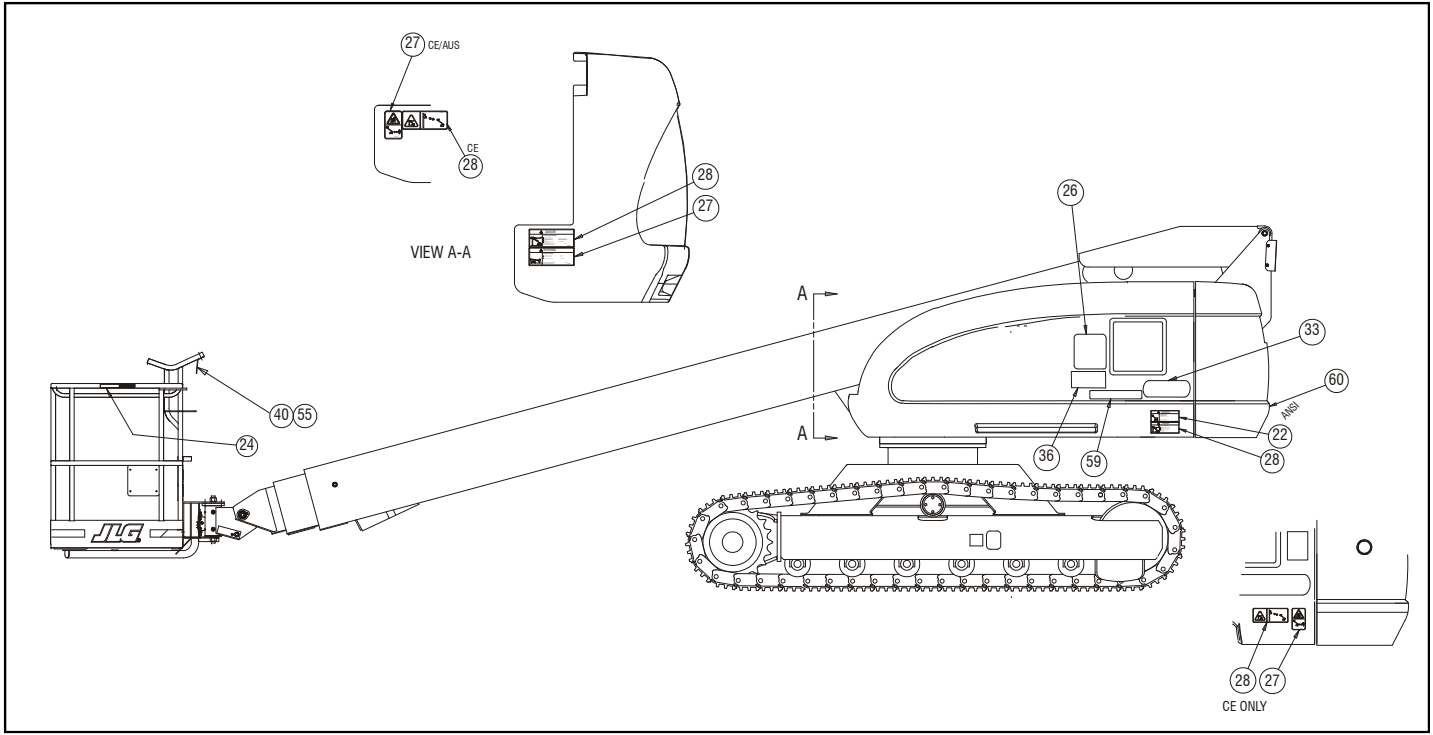

Figure 4-8. Decal Installation - Sheet 2 of 6

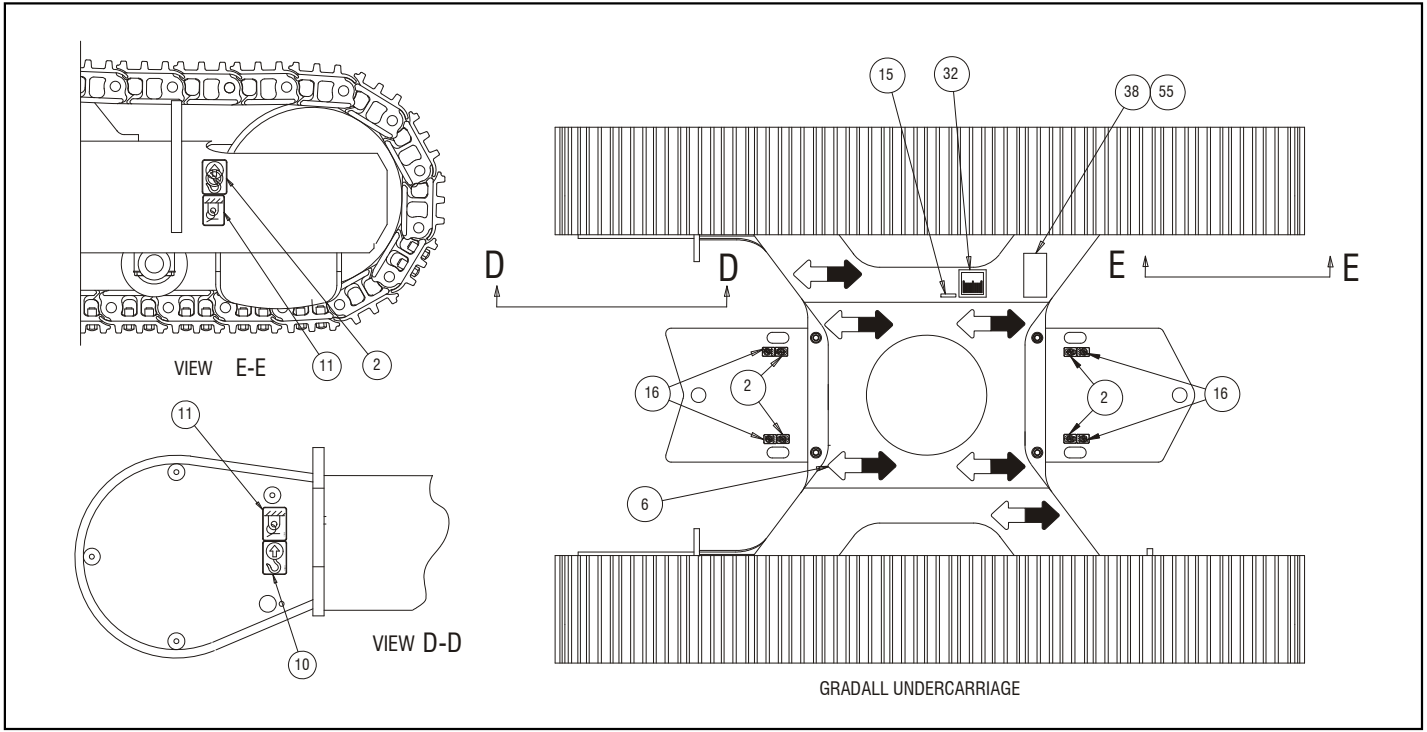

Figure 4-9. Decal Installation - Sheet 3 of 6

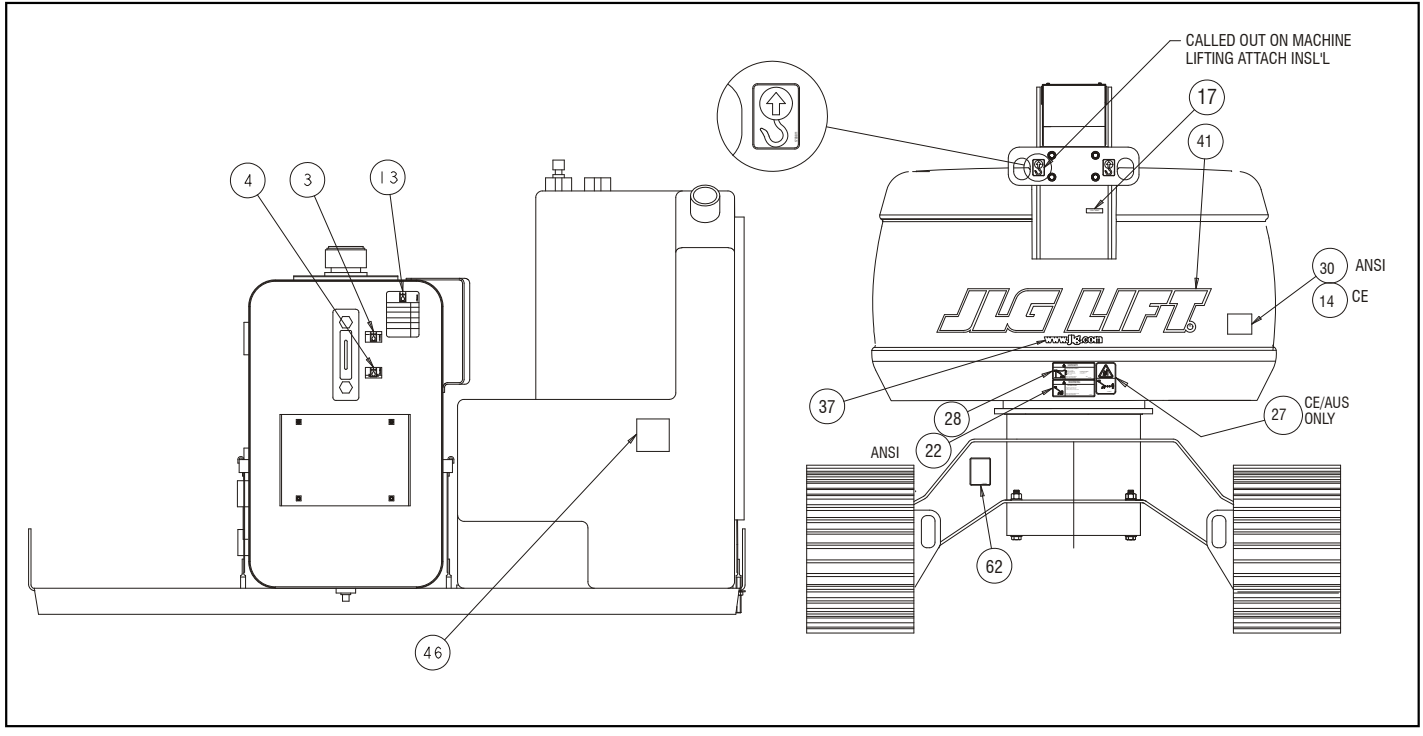

Figure 4-10. Decal Installation - Sheet 4 of 6

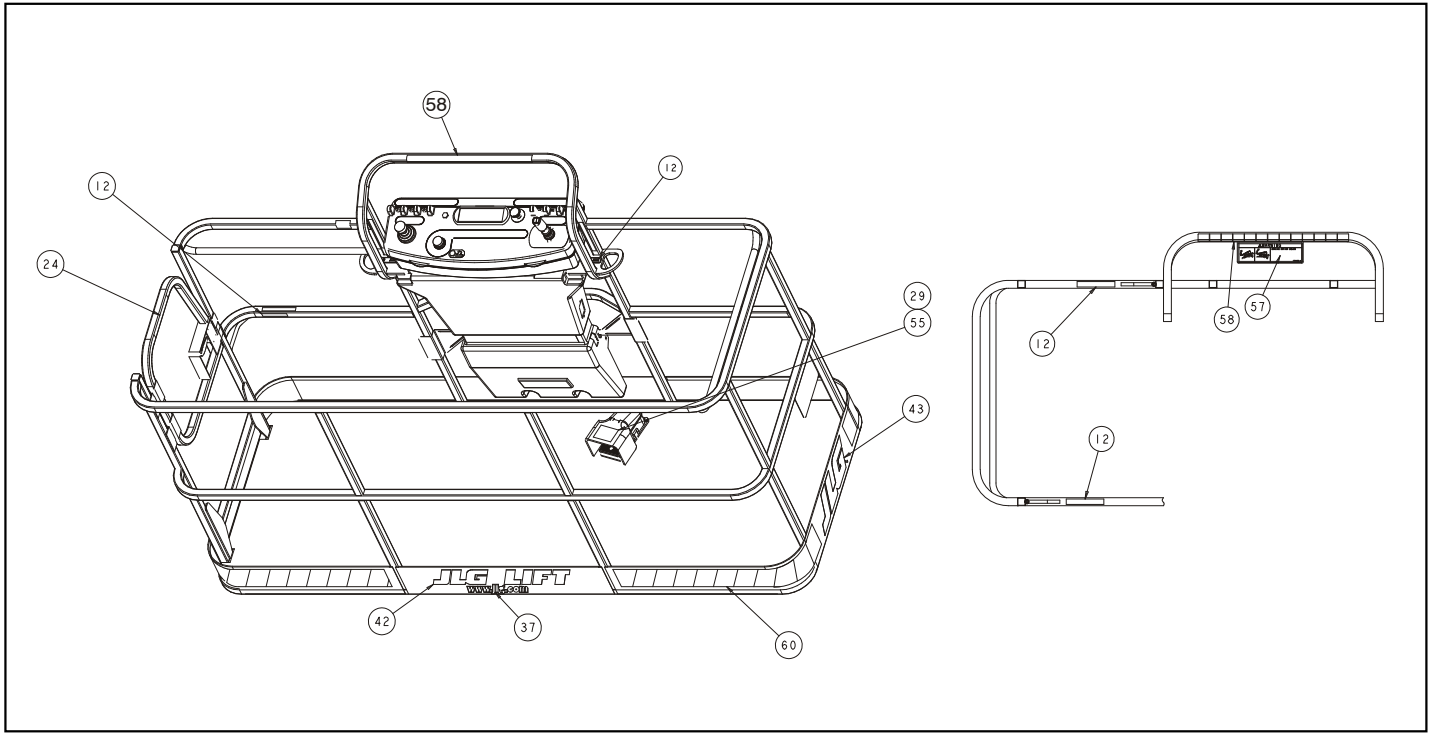

Figure 4-11. Decal Installation - Sheet 5 of 6

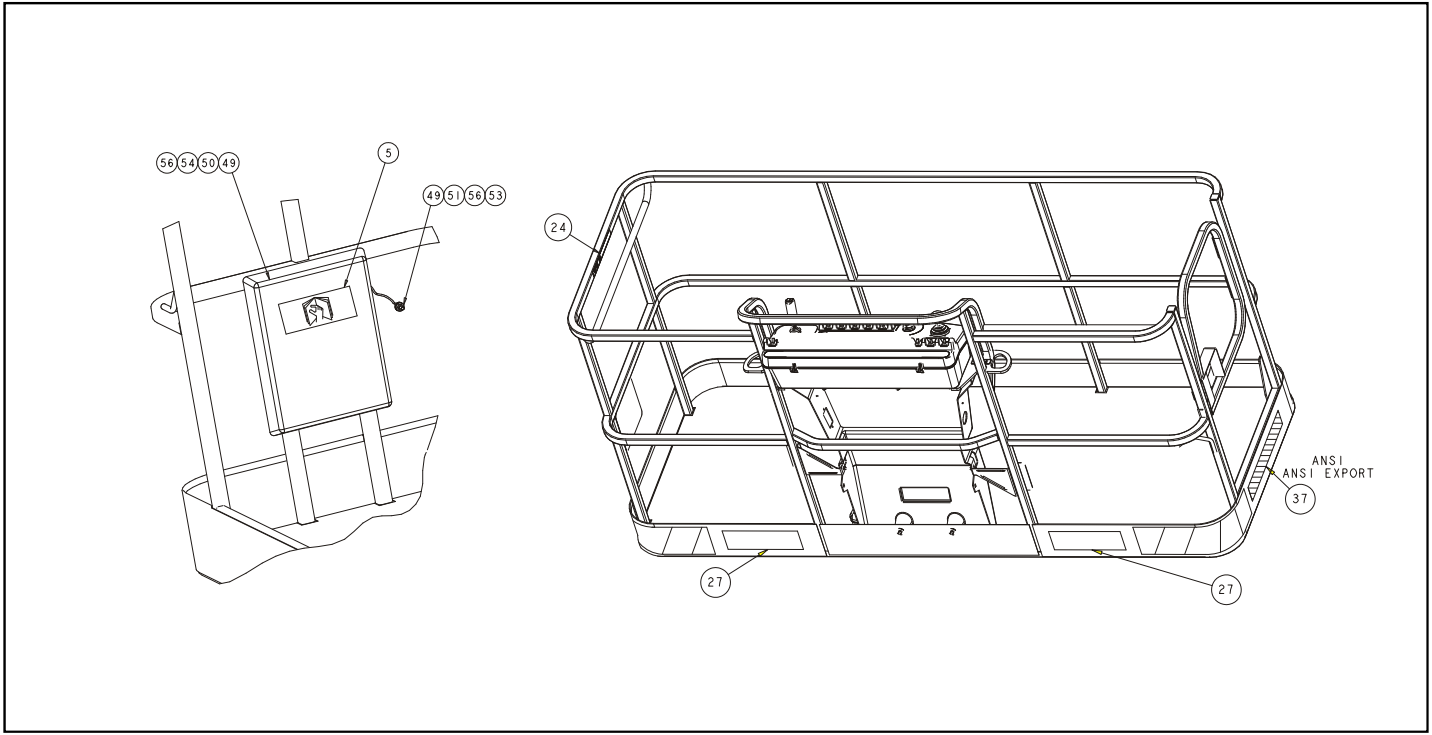

Figure 4-12. Decal Installation - Sheet 6 of 6

Table 4-2. 600SC Decal Legend

Item #	ANSI 0273906-D	Canadian French 0273982-D	CE/Australian 0273985-E	English/ Portuguese 1001093424-D	Simplified Chinese 1001116970-D	Traditional Chinese 1001116971-D
1	--	--	--	--	--	--
2	1701499	1701499	1701499	1701499	1701499	1701499
3	1701502	1701502	1701502	1701502	1701502	1701502
4	1701503	1701503	1701503	1701503	1701503	1701503
5	1701509	1701509	1701509	1701509	1701509	1701509
6	1701529	1701529	1701529	1701529	1701529	1701529
7	--	--	--	--	--	--
8	--	--	--	--	--	--
9	--	--	--	--	--	--
10	1703811	1703811	1703811	1703811	1703811	1703811
11	1703814	1703814	1703814	1703814	1703814	1703814
12	1704277	1704277	1704277	1704277	1704277	1704277
13	1704412	1704412	1704412	1704412	1704412	1704412
14	1705084	1705084	1705084	1705084	1705084	1705084
15	1705514	1705514	1705514	1705514	1705514	1705514
16	1704461	1704461	1704461	1704461	1704461	1704461
17	3251243	3251243	3251243	3251243	3251243	3251243

Table 4-2. 600SC Decal Legend

Item #	ANSI 0273906-D	Canadian French 0273982-D	CE/Australian 0273985-E	English/ Portuguese 1001093424-D	Simplified Chinese 1001116970-D	Traditional Chinese 1001116971-D
18	--	--	--	--	--	--
19	--	--	--	1705904	1705342	1001117034
20	--	--	--	1705906	1705507	1001117035
21	--	--	--	--	--	--
22	1703953	1703942	--	1705903	1001116845	1703943
23	--	--	--	--	--	--
24	1702868	1704000	--	1705967	1705968	1001116846
25	1703797	1703924	1705921	1705895	1001116847	1703925
26	1705336	1705347	1705822	1705896	1001116848	1001116849
27	1703804	1703948	1701518	1705898	1001116850	1703949
28	1703805	1703936	1705961	1705897	1703937	1001116851
29	--	1703984	1705828	1705902	1001116852	1703982
30	--	--	--	--	--	--
31	--	--	--	--	--	--
32	1702631	1702631	1702631	1702631	1702631	1702631
33	1704434	1703165	1704434	1704434	1704434	1704434
34	--	--	--	--	--	--
35	1001121800	1001121802	1705978	1001121806	1001121811	1001121809

Table 4-2. 600SC Decal Legend

Item #	ANSI 0273906-D	Canadian French 0273982-D	CE/Australian 0273985-E	English/ Portuguese 1001093424-D	Simplified Chinese 1001116970-D	Traditional Chinese 1001116971-D
36	1001121813	1001121815	1705978	1001121819	1001121824	1001121822
37	1704885	1704885	1704885	1704885	1704885	1704885
38	1706948	1706948	--	1706948	1706948	1706948
39	1705177	1705177	1705177	1705177	1705177	1705177
40	--	--	--	--	--	--
41	--	--	--	--	--	--
42	--	--	--	--	--	--
43	--	--	--	--	--	--
44	--	--	--	--	--	--
45	--	--	--	--	--	--
46	--	--	--	--	--	--
47	--	--	--	--	--	--
48	--	--	--	--	--	--
49	--	--	--	--	--	--
50	--	--	--	--	--	--
51	--	--	--	--	--	--
52	--	--	--	--	--	--
53	--	--	--	--	--	--

Table 4-2. 600SC Decal Legend

Item #	ANSI 0273906-D	Canadian French 0273982-D	CE/Australian 0273985-E	English/ Portuguese 1001093424-D	Simplified Chinese 1001116970-D	Traditional Chinese 1001116971-D
54	--	--	--	--	--	--
55	--	--	--	--	--	--
56	--	--	--	--	--	--
57	1704468	1001093684	1704468	1001093439	1001116963	1001116964
58	1001108494	1001108494	--	1001108494	1001108494	1001108494
59	1706943	1706943	--	1706943	1706943	1706943
60	--	--	--	--	--	--
61	--	--	--	--	--	--
62	1001131269	1001131269	--	--	--	--

Table 4-3. 660SJC Decal Legend

Item #	ANSI 0273908-D	Canadian French 0273984-D	CE/Australian 0273987-E	English/ Portuguese 1001103292-D
1	--	--	--	--
2	1701499	1701499	1701499	1701499
3	1701502	1701502	1701502	1701502
4	1701503	1701503	1701503	1701503
5	1701509	1701509	1701509	1701509
6	1701529	1701529	1701529	1701529
7	--	--	--	--
8	--	--	--	--
9	--	--	--	--
10	1703811	1703811	1703811	1703811
11	1703814	1703814	1703814	1703814
12	1704277	1704277	1704277	1704277
13	1704412	1704412	1704412	1704412
14	1705084	1705084	1705084	1705084
15	1705514	1705514	1705514	1705514
16	1704461	1704461	1704461	1704461
17	3251243	3251243	3251243	3251243

Table 4-3. 660SJC Decal Legend

Item #	ANSI 0273908-D	Canadian French 0273984-D	CE/Australian 0273987-E	English/ Portuguese 1001103292-D
18	--	--	--	--
19	--	--	--	1705904
20	--	--	--	1705906
21	--	--	--	--
22	1703953	1703942	--	1705903
23	--	--	--	--
24	1702868	1704000	--	1705967
25	1703797	1703924	1705921	1705895
26	1705336	1705347	1705822	1705896
27	1703804	1703948	1701518	1705898
28	1703805	1703936	1705961	1705897
29	3532347	1703984	1705828	1705902
30	--	--	--	3251813
31	--	--	--	--
32	1702631	1702631	1702631	1702631
33	1703165	1703165	1703165	1703165
34	--	--	--	--
35	1001121801	1001121803	1705978	1001121801

Table 4-3. 660SJC Decal Legend

Item #	ANSI 0273908-D	Canadian French 0273984-D	CE/Australian 0273987-E	English/ Portuguese 1001103292-D
36	1001121814	1001121816	1705978	1001121655
37	1704885	1704885	1704885	1704885
38	1706948	1706948	--	1706948
39	1705177	1705177	1705177	1705177
40	--	1001093553	--	1001093553
41	--	--	--	--
42	--	--	--	--
43	--	--	--	--
44	--	--	--	--
45	--	--	--	--
46	--	--	--	--
47	--	--	--	--
48	--	--	--	--
49	--	--	--	--
50	--	--	--	--
51	--	--	--	--
52	--	--	--	--
53	--	--	--	--

Table 4-3. 660SJC Decal Legend

Item #	ANSI 0273908-D	Canadian French 0273984-D	CE/Australian 0273987-E	English/ Portuguese 1001103292-D
54	--	--	--	--
55	--	--	--	--
56	--	--	--	--
57	1704468	1001093684	1704468	1001093439
58	1001108494	1001108494	--	1001108494
59	1706943	1706943	--	1706943
60	--	--	--	--
61	--	--	--	--
62	1001131269	1001131269	--	--

NOTES:

SECTION 5. EMERGENCY PROCEDURES

5.1 GENERAL

This section explains the steps to be taken in case of an emergency situation while operating.

5.2 INCIDENT NOTIFICATION

JLG Industries, Inc. must be notified immediately of any incident involving a JLG product. Even if no injury or property damage is evident, the factory should be contacted by telephone and provided with all necessary details.

In USA:
JLG Phone: 877-JLG-SAFE (554-7233)
(8am till 4:45pm EST)

Outside USA:
240-420-2661

E-mail:

ProductSafety@JLG.com

Failure to notify the manufacturer of an incident involving a JLG Industries product within 48 hours of such an occurrence may void any warranty consideration on that particular machine.

NOTICE

FOLLOWING ANY ACCIDENT, THOROUGHLY INSPECT THE MACHINE AND TEST ALL FUNCTIONS FIRST FROM THE GROUND CONTROLS, THEN FROM THE PLATFORM CONTROLS. DO NOT LIFT ABOVE 3 M (10 FT.) UNTIL YOU ARE SURE THAT ALL DAMAGE HAS BEEN REPAIRED, IF REQUIRED, AND THAT ALL CONTROLS ARE OPERATING CORRECTLY.

5.3 EMERGENCY OPERATION

Operator Unable to Control Machine

IF THE PLATFORM OPERATOR IS PINNED, TRAPPED OR UNABLE TO OPERATE OR CONTROL MACHINE:

1. Other personnel should operate the machine from ground controls only as required.
2. Other qualified personnel on the platform may use the platform controls. DO NOT CONTINUE OPERATION IF CONTROLS DO NOT FUNCTION PROPERLY.
3. Cranes, forklift trucks or other equipment can be used to remove platform occupants and stabilize motion of the machine.

Platform or Boom Caught Overhead

If the platform or boom becomes jammed or snagged in overhead structures or equipment, rescue platform occupants prior to freeing the machine.

5.4 MACHINE SAFETY SYSTEM OVERRIDE (MSSO)(CE ONLY)

The Machine Safety System Override (MSSO) is only to be used to retrieve an operator that is pinned, trapped, or unable to operate the machine and function controls are locked out from the platform due to a platform overload situation.

NOTE: *If the MSSO functionality is used, the fault indicator will flash and a fault code is set in the JLG Control System which must be reset by a qualified JLG Service Technician.*

NOTE: *No functional checks of the MSSO system are necessary. The JLG Control system will set a Diagnostic Trouble Code if the control switch is faulty.*

To operate the MSSO:

1. From the ground control console, place the Platform/ Ground Select switch in the Ground position.

2. Pull out the Power/Emergency Stop control.

3. Start the engine.

4. Press and hold the MSSO switch and the control switch for the desired function.

SECTION 6. GENERAL SPECIFICATIONS & OPERATOR MAINTENANCE

6.1 INTRODUCTION

This section of the manual provides additional necessary information to the operator for proper operation and maintenance of this machine.

The maintenance portion of this section is intended as information to assist the machine operator to perform daily maintenance tasks only, and does not replace the more thorough Preventive Maintenance and Inspection Schedule included in the Service and Maintenance Manual.

Other Publications Available:

Service and Maintenance Manual
(S/N - 0300174703 to Present.....3121607

Illustrated Parts Manual
(S/N - 0300174703 to Present) 3121608

6.2 OPERATING SPECIFICATIONS

Table 6-1. Operating Specifications

Maximum Work Load (Capacity) - ANSI Unrestricted: Restricted - 600SC Restricted - 660SJC	 500 lb. (227 kg) 1000 lb. (454 kg) 500 lb. (227 kg)
Maximum Work Load (Capacity) - CE & Australia Unrestricted: Restricted - 600SC Restricted - 660SJC	 500 lb. (230 kg) 1000 lb. (450 kg) 500 lb. (230 kg)
Maximum Travel Grade (Gradeability)*	55%
Maximum Travel Grade (Side Slope)*	5°
Max.Vertical Platform Height: 600SC 660SJC	 60 ft. 3 in. (18.36 m) 66 ft. 8 in. (20.32 m)
Max.Horizontal Platform Reach: 600SC 660SJC	 49 ft. 6 in. (15.09 m) 56 ft. 9 in. (17.3 m)
Turning Radius	0

Table 6-1. Operating Specifications

Maximum Ground Bearing Pressure	
600SC	5.45 psi (0.383 kg/cm^2)
660SJC	6.5 psi (0.457 kg/cm^2)
Maximum Drive Speed:	1.6 mph (2.6 kph)
Max. Hydraulic System Pressure	4500 psi (310 Bar)
Maximum Wind Speed	28 mph (12.5 m/s)
Maximum Manual Force	101 lb. (450 N)
Electrical System Voltage	12 Volts
Gross Machine Weight (Platform Empty)	
600SC	22,500 lb. (10,205 kg)
660SJC	27,100 lb. (12,292 kg)

*With boom in stowed position.

Capacities

Table 6-2. Capacities

Fuel Tank	39 US. Gallons (147.6 L)
Hydraulic Oil Tank	
Total Volume	26 U.S. Gallons (98.4 L)
at Full Mark	31.1 U.S. Gallons (117.7 L)
Hydraulic System (Including Tank)	40 U.S. Gallons (151.4 L)
Engine Crankcase	11 quarts (10.5 L)

Engine Data

Table 6-3. Deutz D2011L04 Specifications

Fuel	Diesel
Oil Capacity Cooling System Crankcase Total Capacity	 5 Quarts (4.5 L) 11 Quarts (10.5 L) w/Filter 16 Quarts (15 L)
Idle RPM	1000
Low RPM	1800
High RPM	2500
Alternator	60 Amp, belt drive
Battery	950 Cold Cranking Amps, 205 Minutes Reserve Capacity, 12 VDC
Fuel Consumption	0.65 GPH (2.46 lph)
Horsepower	49

Hydraulic Oil

Table 6-4. Hydraulic Oil

HYDRAULIC SYSTEM OPERATING TEMPERATURE RANGE	SAE VISCOSITY GRADE
+0° to +180° F (-18° C to +83° C)	10W
+0° F to +210° F (-18° C to +99° C)	10W-20, 10W-30
+50° F to +210° F (+10° C to +210° C)	20W-20

NOTE: *Hydraulic oils must have anti-wear qualities at least to API Service Classification GL-3, and sufficient chemical stability for mobile hydraulic system service. JLG Industries recommends Mobilfluid 424 hydraulic oil, which has an SAE viscosity index of 152.*

NOTE: *When temperatures remain below 20° F (-7 degrees C), JLG Industries recommends the use of Mobil DTE 13M.*

Aside from JLG recommendations, it is not advisable to mix oils of different brands or types, as they may not contain the same required additives or be of comparable viscosities. If use of hydraulic oil other than Mobilfluid 424 is desired, contact JLG Industries for proper recommendations.

Table 6-5. Mobilfluid 424 Specs

SAE Grade	10W30
Gravity, API	29.0
Density, Lb/Gal. 60°F	7.35
Pour Point, Max	-46°F (-43°C)
Flash Point, Min.	442°F (228°C)
Viscosity	
Brookfield, cP at -18°C	2700
at 40° C	55 cSt
at 100° C	9.3 cSt
Viscosity Index	152

Table 6-6. Mobil DTE 10 Excel 32 Specs

ISO Viscosity Grade	#32
Specific Gravity	0.877
Pour Point, Max	-65.2°F (-54°C)
Flash Point, Min.	482°F (250°C)
Viscosity	
at 40° C	32.7cSt
at 100° C	6.63 cSt
at 100° F	32.7 cSt
at 212° F	6.63 cSt
cp at -20° F	6,200
Viscosity Index	164

Table 6-7. Quintolubric 888-46

Density @ 15°	220
Pour Point	275°C (527°F)
Flash Point	325°C (617°F)
Fire Point	50-0 ml
Autoignition Temperature	450°C (842°F)
Viscosity	
at 0° C (32°F)	360 cSt
at 20° C (68°F)	102 cSt
at 40° C (104°F)	46 cSt
at 100° C (212°F)	10 cSt
Viscosity Index	2.0 mg KOH/g

Table 6-8. Mobil EAL 224H Specs

Type	Synthetic Biodegradable
ISO Viscosity Grade	32/46
Specific Gravity	.922
Pour Point, Max	-25°F (-32°C)
Flash Point, Min.	428°F (220°C)
Operating Temp.	0 to 180°F (-17 to 162°C)
Weight	7.64 lb. per gal. (0.9 kg per liter)
Viscosity	
at 40° C	37 cSt
at 100° C	8.4 cSt
Viscosity Index	213
NOTE: *Must be stored above 32°F (14°C)*	

Table 6-9. Mobil EAL H 46 Specs

Type	Synthetic Biodegradable
ISO Viscosity Grade	46
Specific Gravity	.910
Pour Point	-44°F (-42°C)
Flash Point	500°F (260°C)
Operating Temp.	0 to 180°F (-17 to 162°C)
Weight	7.64 lb. per gal. (0.9 kg per liter)
Viscosity	
at 40° C	45 cSt
at 100° C	8.0 cSt
Viscosity Index	153

Table 6-10. Exxon Univis HVI 26 Specs

Specific Gravity	32.1
Pour Point	-76°F (-60°C)
Flash Point	217°F (103°C)
Viscosity	
at 40° C	25.8 cSt
at 100° C	9.3 cSt
Viscosity Index	376

NOTE: *Mobil/Exxon recommends that this oil be checked on a yearly basis for viscosity.*

Major Component Weights

Table 6-11. Major Component Weights

	660SJ		600S	
	LB.	KG.	LB.	KG.
Platform Control Console	250	113	250	113
Platform Level Cylinder	60	27	46	21
Main Boom (Includes Lift Cyl., Rotator, and Support)	3783	1716	3527	1600
Turntable Complete (including engine)	9065	4112	7315	3318

Serial Number Locations

A serial number plate is affixed to the left rear side of the frame. If the serial number plate is damaged or missing, the machine serial number is stamped on the left side of the frame.

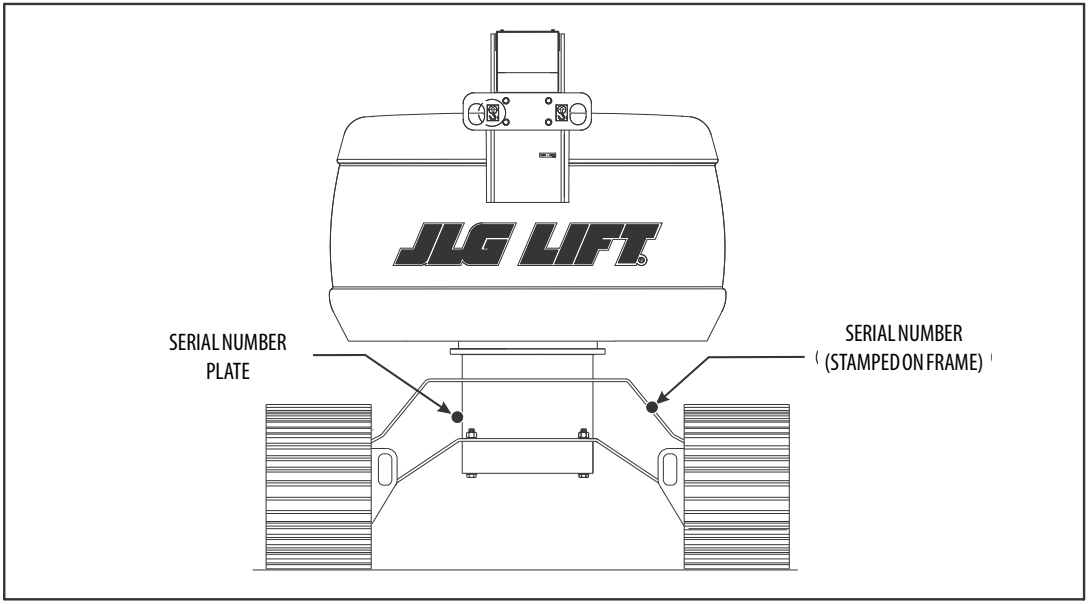

Figure 6-1. Serial Number Locations

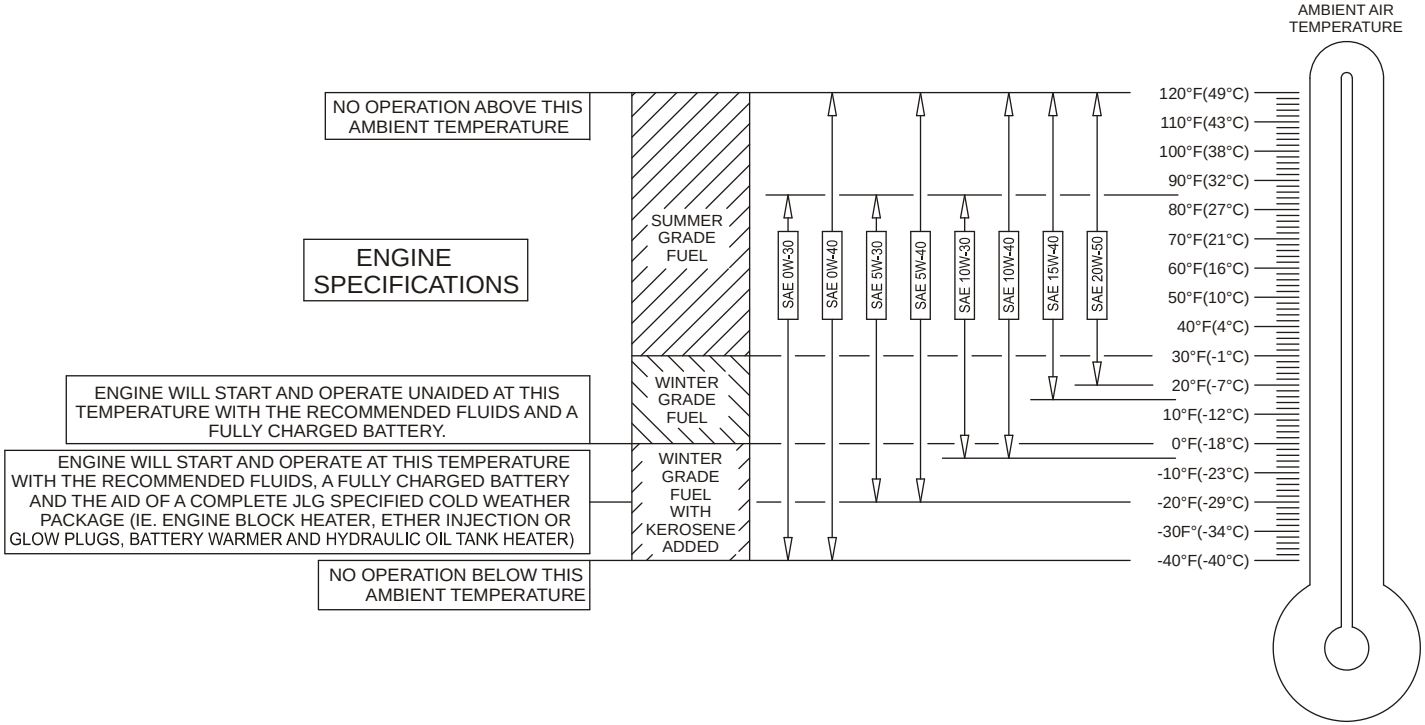

Figure 6-2. Engine Operating Temperature Specifications - Deutz - Sheet 1 of 2

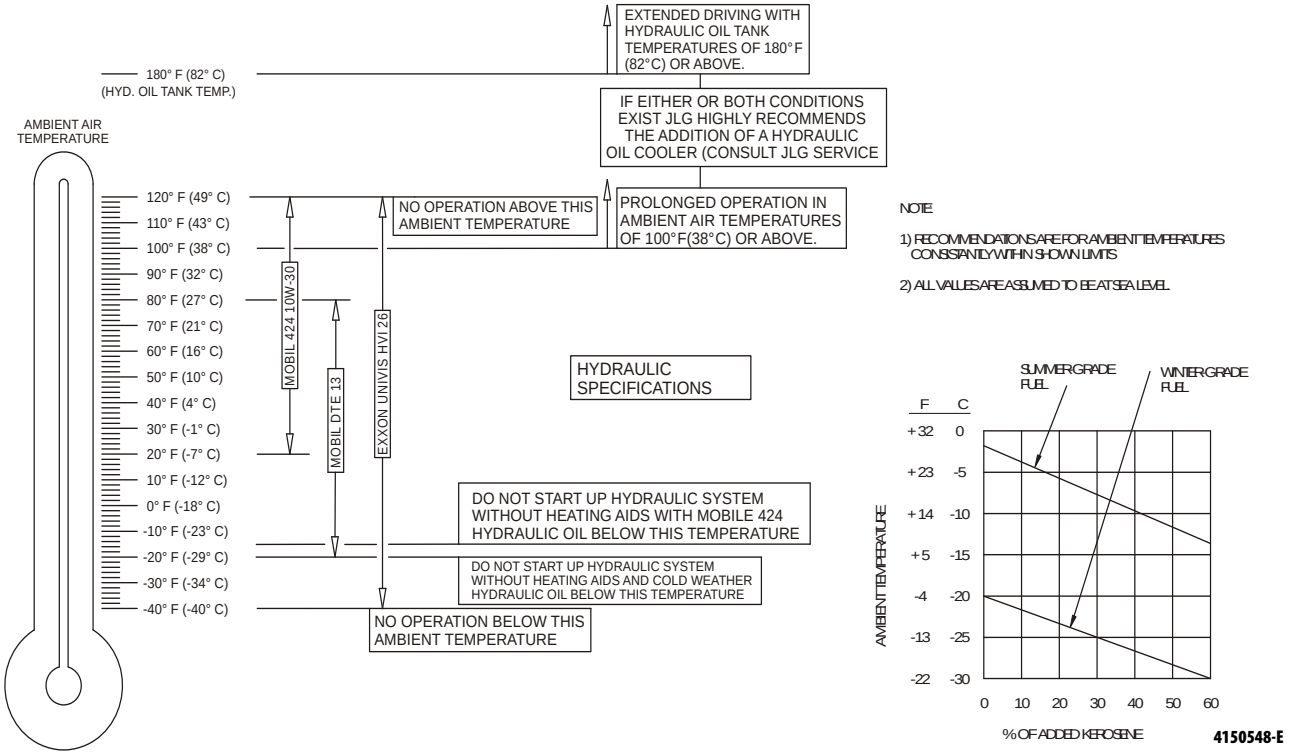

Figure 6-3. Engine Operating Temperature Specifications - Deutz - Sheet 2 of 2

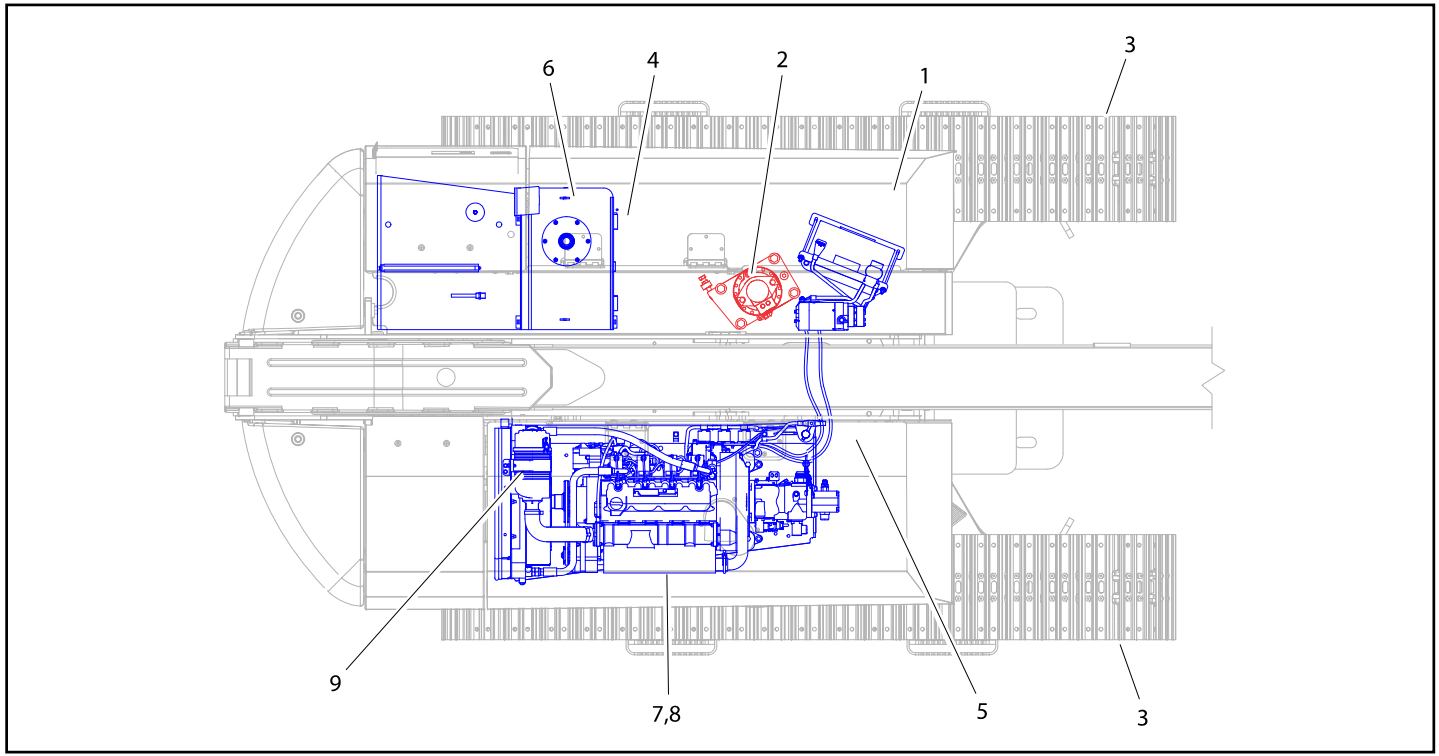

Figure 6-4. Operator Maintenance and Lubrication Diagram

6.3 OPERATOR MAINTENANCE

NOTE: *The following numbers correspond to those in Figure 6-4., Operator Maintenance and Lubrication Diagram.*

Table 6-12. Lubrication Specifications

KEY	SPECIFICATIONS
MPG	Multipurpose Grease having a minimum dripping point of 350° F (177° C). Excellent water resistance and adhesive qualities, and being of extreme pressure type. (Timken OK 40 pounds minimum.)
EPGL	Extreme Pressure Gear Lube (oil) meeting API service classification GL-5 or MIL-Spec MIL-L-2105
HO	Hydraulic Oil. API service classification GL-3, e.g. Mobilfluid 424.
EO	Engine (crankcase) Oil. Gas - API SF, SH, SG class, MIL-L-2104. Diesel - API CC/CD class, MIL-L-2104B/MIL-L-2104C.

NOTICE

LUBRICATION INTERVALS ARE BASED ON MACHINE OPERATION UNDER NORMAL CONDITIONS. FOR MACHINES USED IN MULTI-SHIFT OPERATIONS AND/OR EXPOSED TO HOSTILE ENVIRONMENTS OR CONDITIONS, LUBRICATION FREQUENCIES MUST BE INCREASED ACCORDINGLY.

1. Swing Bearing

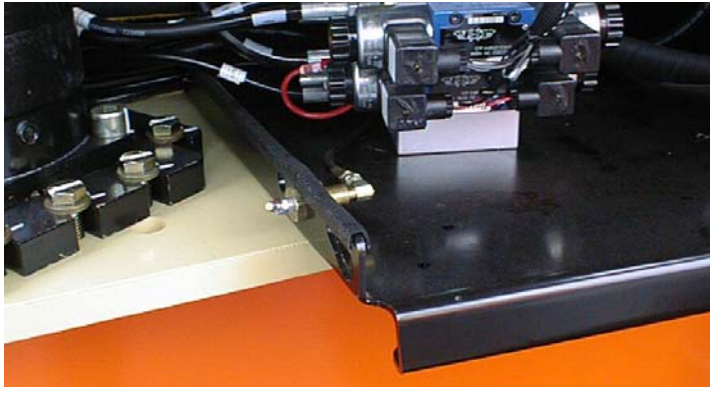

Lube Point(s) - 2 Grease Fittings
Capacity - A/R
Lube - MPG
Interval - Every 3 months or 150 hrs of operation
Comments - Remote Access

2. Swing Drive Hub

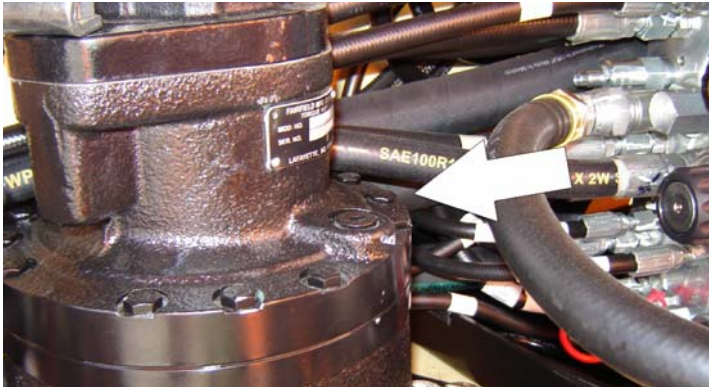

Lube Point(s) - Level/Fill Plug
Capacity - 17 oz. (1/2 Full)
Lube - EPGL
Interval - Check level every 3 months or 150 hrs of operation; change every 2 years or 1200 hours of operation

3. Final Drive Hub

Lube Point(s) - Level/Fill Plug
Capacity - 2.1 gal.(7.9 L); 1/2 Full
Lube - EPGL
Interval - Check level every 3 months or 150 hrs of operation; change every 2 years or 1200 hours of operation

4. Hydraulic Return Filter

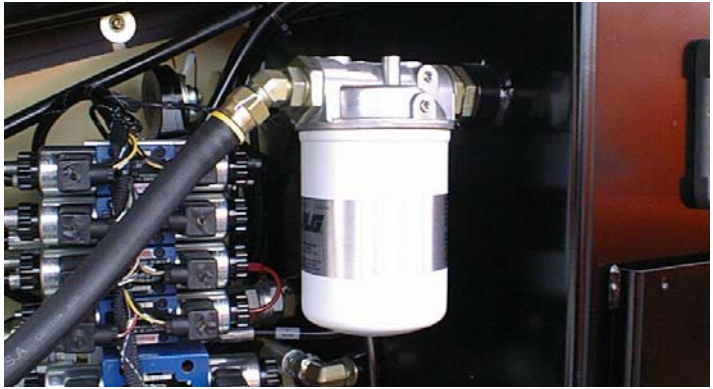

Interval - Change after first 50 hrs. and every 6 months or 300 hrs. thereafter or as indicated by Condition Indicator.

5. Hydraulic Charge Filter

Interval - Change after first 50 hrs. and every 6 months or 300 hrs. thereafter or as indicated by Condition Indicator.

6. Hydraulic Tank

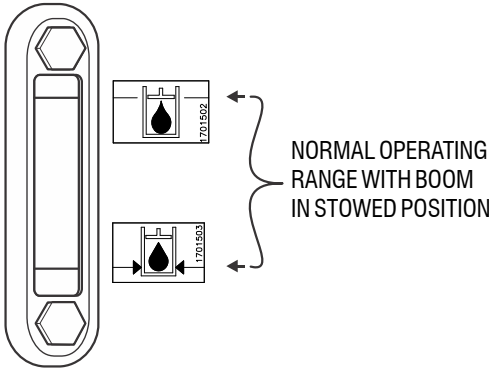

Lube Point(s) - Fill Cap
Capacity - 30.6 gal. Tank; 32.7 gal. System
Lube - HO
Interval - Check Level daily; Change every 2 years or 1200 hours of operation.

7. Oil Change w/Filter - Deutz

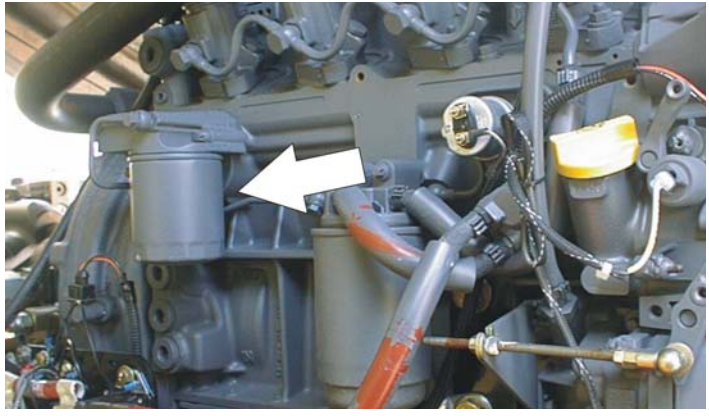

Lube Point(s) - Fill Cap/Spin-on Element
Capacity - 11 Quarts Crankcase; 5 Quarts Cooler
Lube - EO
Interval - Every Year or 1200 hours of operation
Comments - Check level daily/Change in accordance with engine manual.

8. Fuel Filter - Deutz

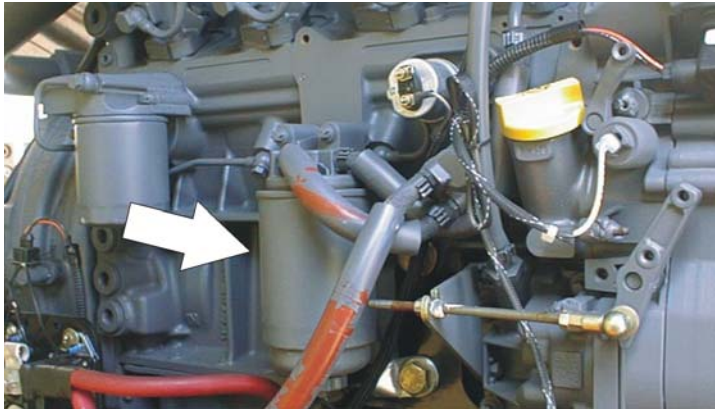

Lube Point(s) - Replaceable Element
Interval - Every Year or 600 hours of operation

9. Air Filter

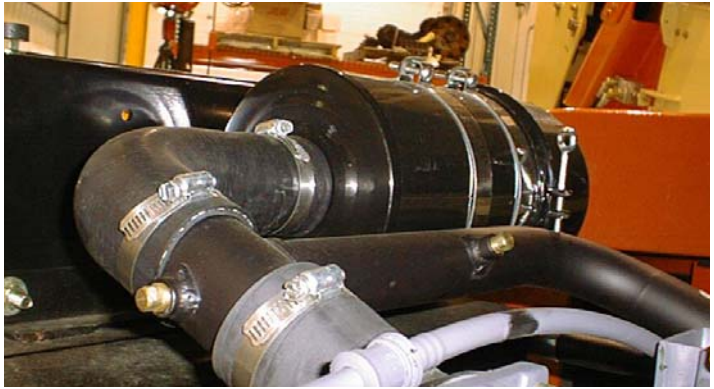

Lube Point(s) - Replaceable Element
Interval - Every 6 months or 300 hours of operation or as indicated by the condition indicator

6.4 SUPPLEMENTAL INFORMATION

The following information is provided in accordance with the requirements of the European Machinery Directive 2006/42/EC and is only applicable to CE machines.

For electric powered machines, the equivalent continuous A-Weighted sound pressure level at the work platform is less than 70dB(A)

For combustion engine powered machines, guaranteed Sound Power Level (LWA) per European Directive 2000/14/EC (Noise Emission in the Environment by Equipment for Use Outdoors) based on test methods in accordance with Annex III, Part B, Method 1 and 0 of the directive, is 104 dB.

The vibration total value to which the hand-arm system is subjected does not exceed 2,5 m/s^2. The highest root mean square value of weighted acceleration to which the whole body is subjected does not exceed 0,5 m/s^2.

SECTION 7. INSPECTION AND REPAIR LOG

Machine Serial Number _____

Table 7-1. Inspection and Repair Log

Date	Comments

Table 7-1. Inspection and Repair Log

Date	Comments

An Oshkosh Corporation Company

TRANSFER OF OWNERSHIP

To Product Owner:

If you now own but ARE NOT the original purchaser of the product covered by this manual, we would like to know who you are. For the purpose of receiving safety-related bulletins, it is very important to keep JLG Industries, Inc. updated with the current ownership of all JLG products. JLG maintains owner information for each JLG product and uses this information in cases where owner notification is necessary.

Please use this form to provide JLG with updated information with regard to the current ownership of JLG products. Please return completed form to the JLG Product Safety & Reliability Department via facsimile or mail to address as specified below.

Thank You,
Product Safety & Reliability Department
JLG Industries, Inc.
13224 Fountainhead Plaza
Hagerstown, MD 21742
USA
Telephone: +1-717-485-6591
Fax: +1-301-745-3713

NOTE: Leased or rented units should not be included on this form.

Mfg. Model: _____

Serial Number: _____

Previous Owner: _____

Address: _____

_____

Country: _____ **Telephone: (_____)** _____

Date of Transfer: _____

Current Owner: _____

Address: _____

_____

Country: _____ **Telephone: (_____)** _____

Who in your organization should we notify?

Name: _____

Title:_____

WARNING:

The engine exhaust from this product contains chemicals known to the State of California to cause cancer, birth defects, or other reproductive harm.

1702961

PROPOSITION 65 WARNING

- **Battery posts, terminals and related accessories contain lead and lead compounds, chemicals known to the State of California to cause cancer and reproductive harm.**
- **Batteries also contain other chemicals known to the State of California to cause cancer.**
- **Wash hands after handling.**

An Oshkosh Corporation Company

JLG Industries, Inc.
1 JLG Drive
McConnellsburg PA. 17233-9533
USA

(717) 485-5161 (Corporate)
(800) 544-5438 (Service)
(717) 485-6417
www.jlg.com

3121606

JLG Worldwide Locations

JLG Industries
358 Park Road
Regents Park
NSW 2143
Sydney 2143
Australia
+6 (12) 87186300
+6 (12) 65813058
Email: techservicesauc@jlg.com

JLG Ground Support Oude
Bunders 1034
Breitwaterstraat 12A
3630 Maasmechelen
Belgium
+32 (0) 89 84 82 26
Email: emeaservice@jlg.com

JLG Latino Americana LTDA
Rua Antonia Martins Luiz, 580
Distrito Industrial Joao Narezzi
Indiaatuba-SP 13347-404
Brasil
+55 (19) 3936 7664 (Parts)
+55(19)3936 9049 (Service)
Email: comercialpecas@jlg.com
Email: servicos@jlg.com

Oshkosh-JLG (Tianjin) Equipment
Technology LTD
Shanghai Branch
No 465 Xiao Nan Road
Feng Xian District
Shanghai 201204
China
+86 (21) 800 819 0050

JLG Industries Dubai
Jafza View
PO Box 262728, LB 19
20th Floor, Office 05
Jebel Ali, Dubai
+971 (0) 4 884 1131
+971 (0) 4 884 7683
Email: emeaservice@jlg.com

JLG France SAS
Z.I. Guillaume Mon Amy
30204 Fauillet
47400 Tonniens
France
+33 (0) 553 84 85 86
+33 (0) 553 84 85 74
Email: pieces@jlg.com

JLG Deutschland GmbH
Max Planck Str. 21
27721 Ritterhude - Ihlpohl
Germany
+49 (0) 421 69350-0
+49 (0) 421 69350-45
Email:german-parts@jlg.com

JLG Equipment Services Ltd.
Rm 1107 Landmark North
39 Lung Sum Avenue
Sheung Shui N. T.
Hong Kong
+(852) 2639 5783
+(852) 2639 5797

JLG Industries (Italia) S.R.L.
Via Po. 22
20010 Pregnana Milanese (MI)
Italy
+39 (0) 2 9359 5210
+39 (0) 2 9359 5211
Email: ricambi@jlg.com

JLG EMEA B.V.
Polaris Avenue 63
2132 JH Hoofdorf
The Netherlands
+31 (0) 23 565 5665
Email: emeaservice@jlg.com

JLG NZ Access Equipment & Services
2B Fisher Cresent
Mt Wellington 1060
Auckland, New Zealand
+6 (12) 87186300
+6 (12) 65813058
Email:techservicesaus@jlg.com

JLG Industries
Vahutinskoe shosse 24b.
Khimki
Moscow Region 141400
Russia Federation
+7 (499) 922 06 99
+7 (499) 922 06 99

Oshkosh-JLG Singapore Technology
Equipment Pte Ltd.
35 Tuas Avenue 2
Jurong Industrial Estate
Singapore 639454
+65 6591 9030
+65 6591 9045
Email: SEA@jlg.com

JLG Iberica S.L.
Trapadella, 2
Pol. Ind. Castellbisbal Sur
08755 Castellbisbal Barcelona
Spain
+34 (0) 93 772 47 00
+34 (0) 93 771 1762
Email:parts_iberica@jlg.com

JLG Sverige AB
Enkopingsvagen 150
176 27 Jarfalla
Sweden
+46 (0) 8 506 595 00
+46 (0) 8 506 595 27
Email: nordicsupport@jlg.com

JLG Industries (UK) Ltd.
Bentley House
Bentley Avenue
Middleton, Greater Manchester
M24 2GP
United Kingdom
+44 (0) 161 654 1000
+44 (0) 161 654 1003
Email: ukparts@jlg.com